ANDY

REVISIONS				
ZONE	LTR	DESCRIPTION	DATE	APPROVED

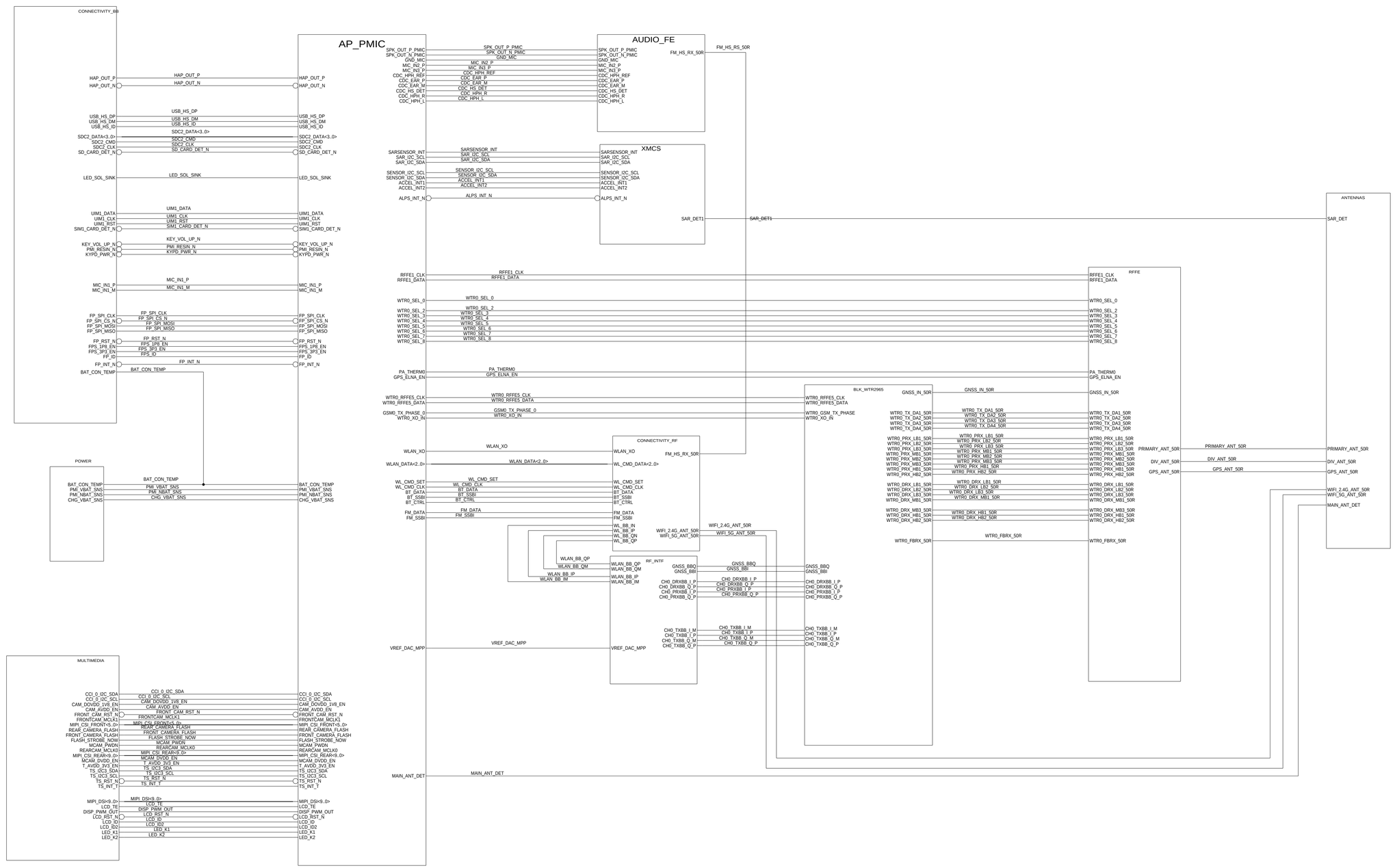

REVISIONS				
ZONE	LTR	DESCRIPTION	DATE	APPROVED

ANDY REFERENCE DESIGNATOR RANGES BY BLOCK

1000-1399 :AP_PMIC
1400-1449 :PWOER
1450-1499 :AUDIO_FE
1500-1999:CONNECTIVITY_BB
2000-2499:MULTIMEDIA
2500-2999:XMCS
5000-5499:RF_INTF
5500-5999:BLK_WTR2965
6000-7999:B_RFFE
8000-8499:ANTENNAS
8500-8999:CONNECTIVITY_RF

1000:MSM8917:Control
REF 1000-1019

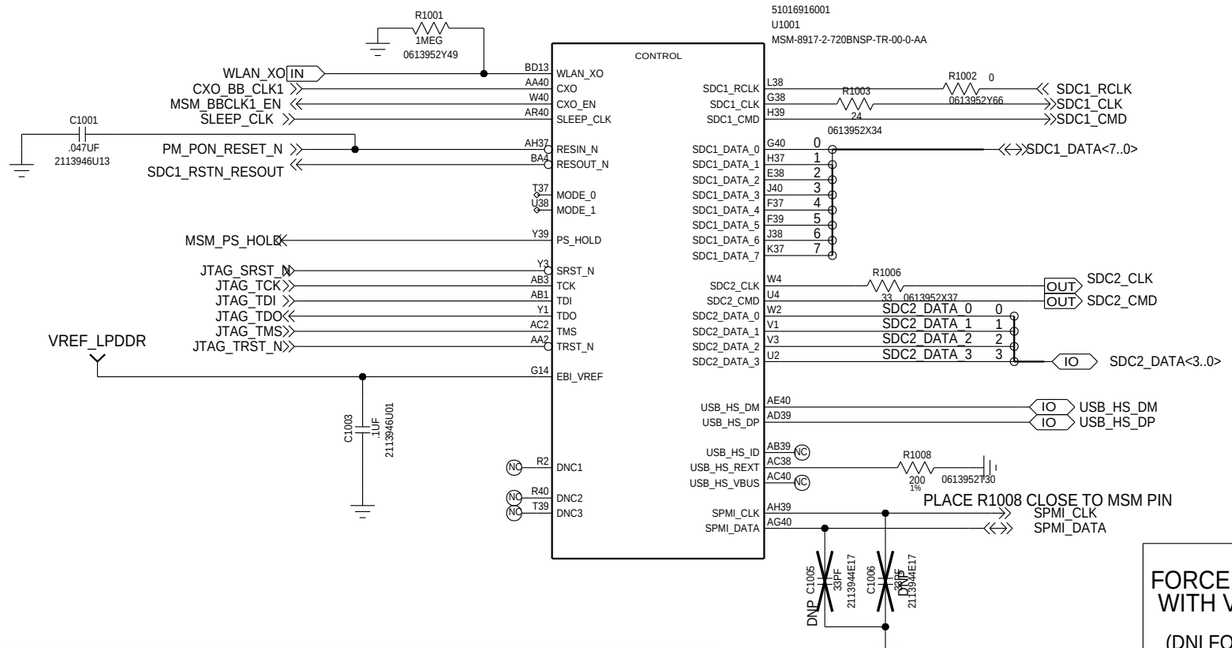

SPMI DATA AND CLOCK TRACE LENGTH DIFFERENCE MUST BE WITHIN +/-2MM

33PF SHUNT CPAS MUST BE NO MORE THAN 2MM AWAY FROM MSM

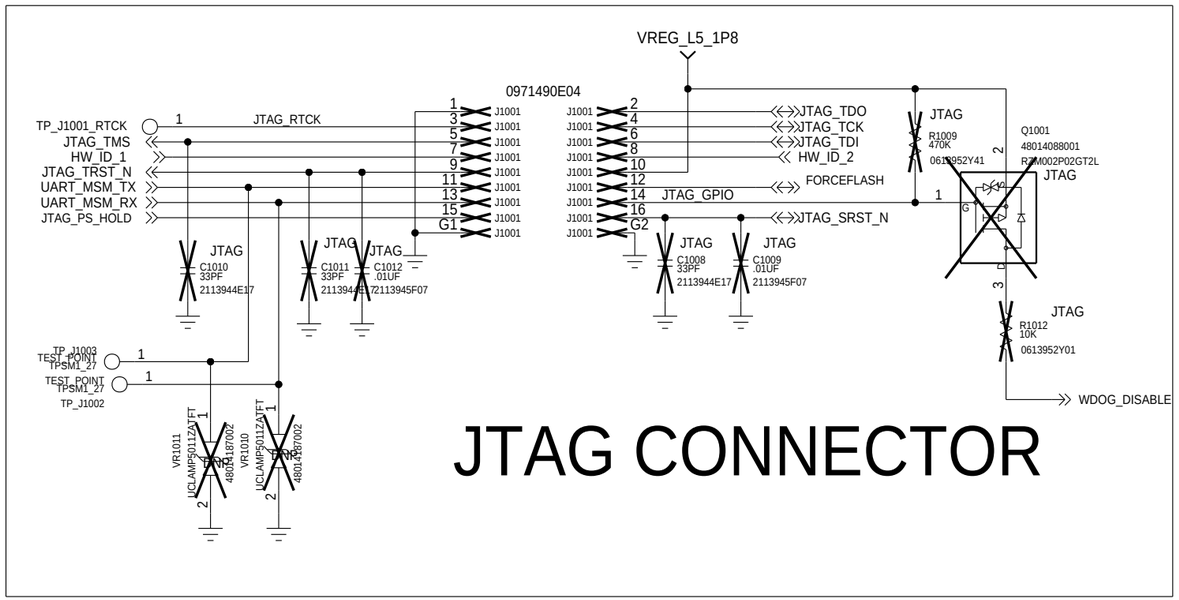

JTAG CONNECTOR

FORCE FLASH SUPPORT WITH VOL UP KEY

(DNI FOR PRODUCTION)

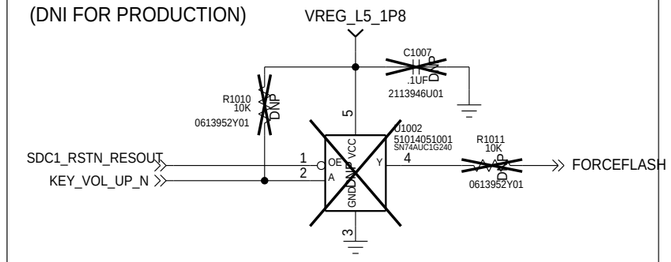

1020:MSM8917:MIPI/EBI

REF 1020-1029

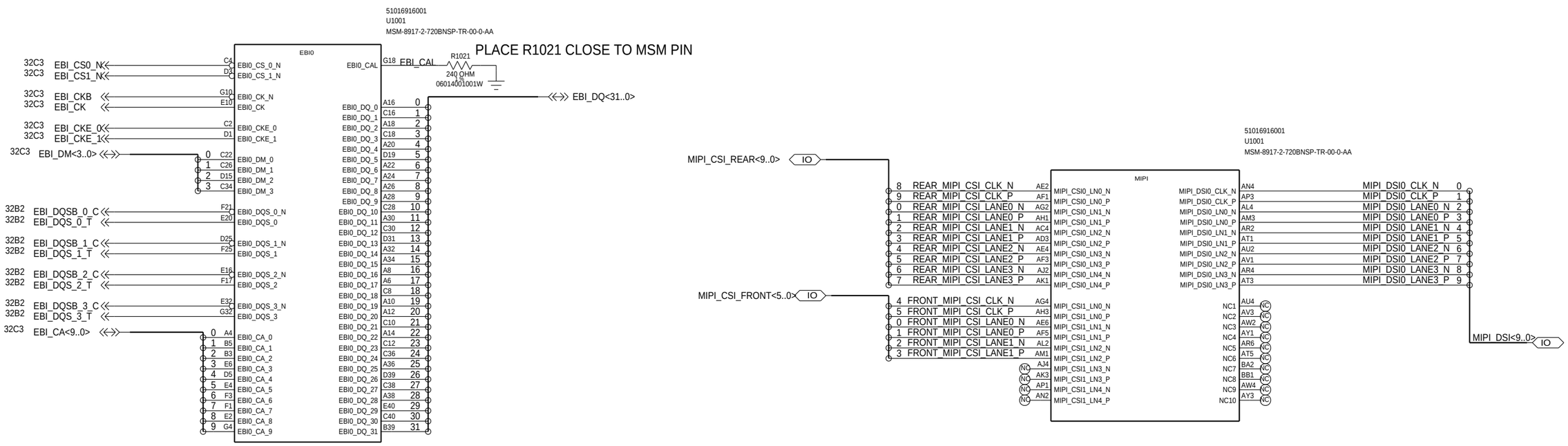

1030:MEMORY
REF1030-1069

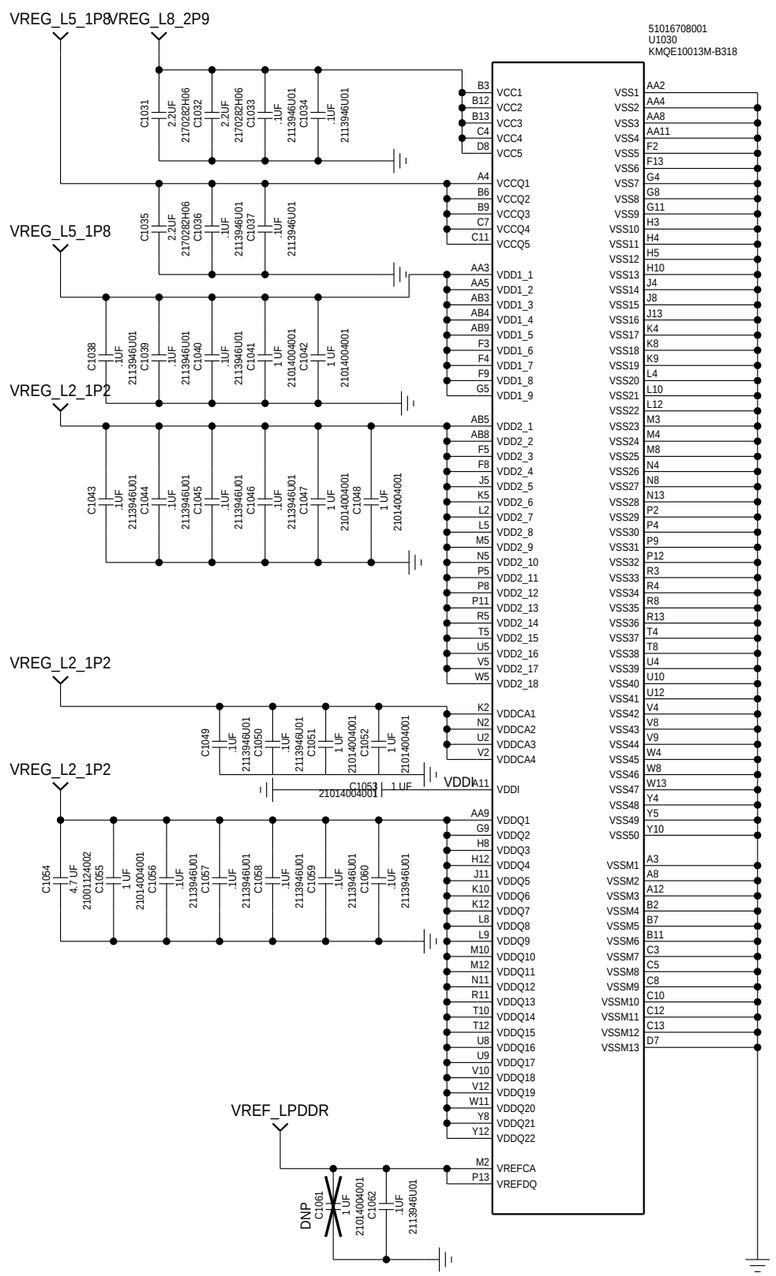

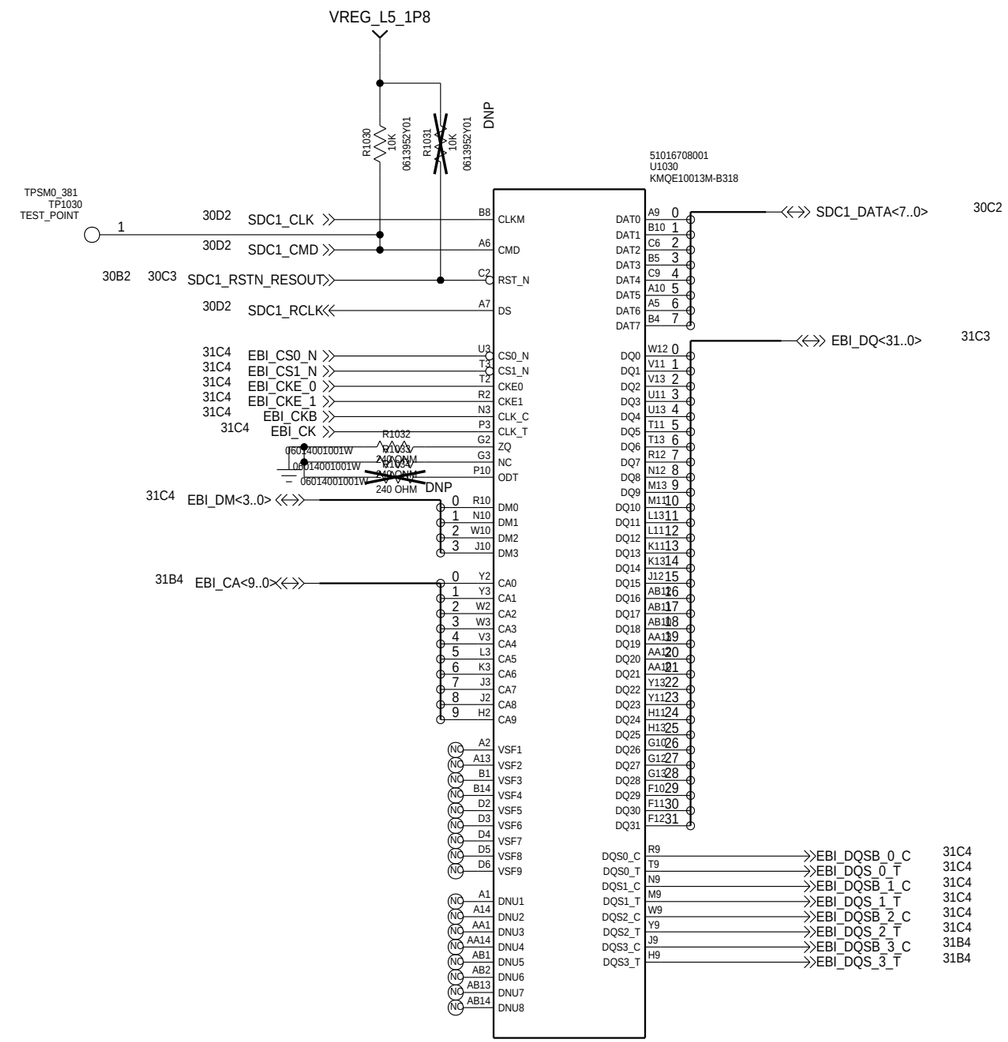

1070:MSM8917:GPIO

REF 1070-1099

SHOULD CONFIRM

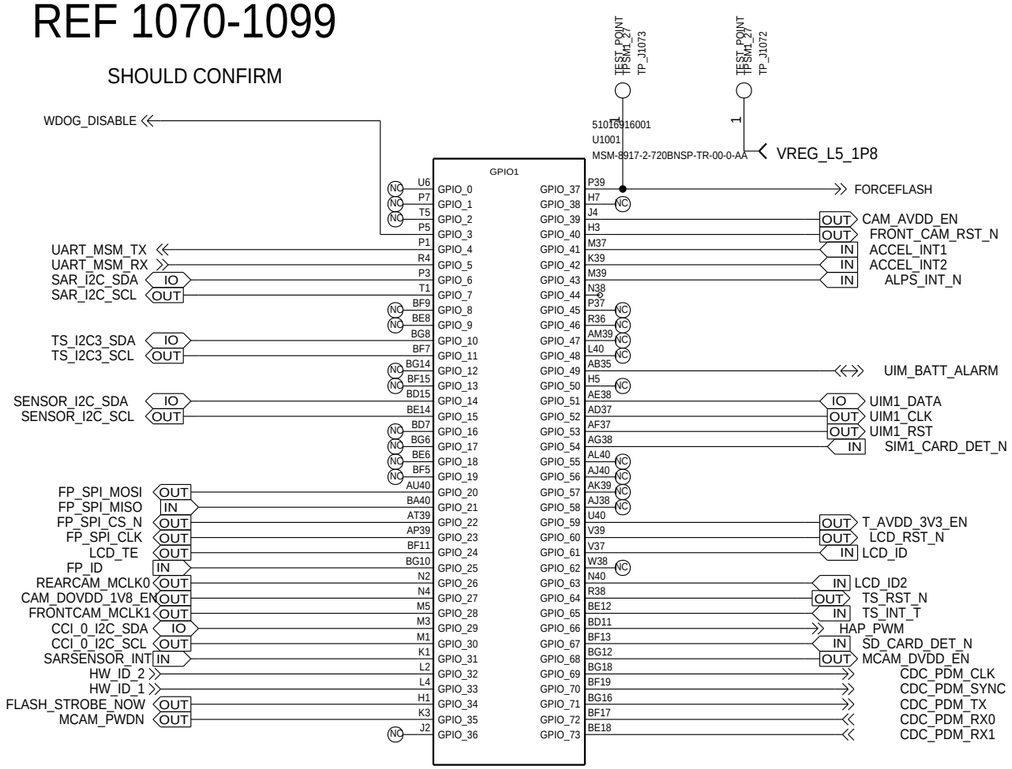

DVT1

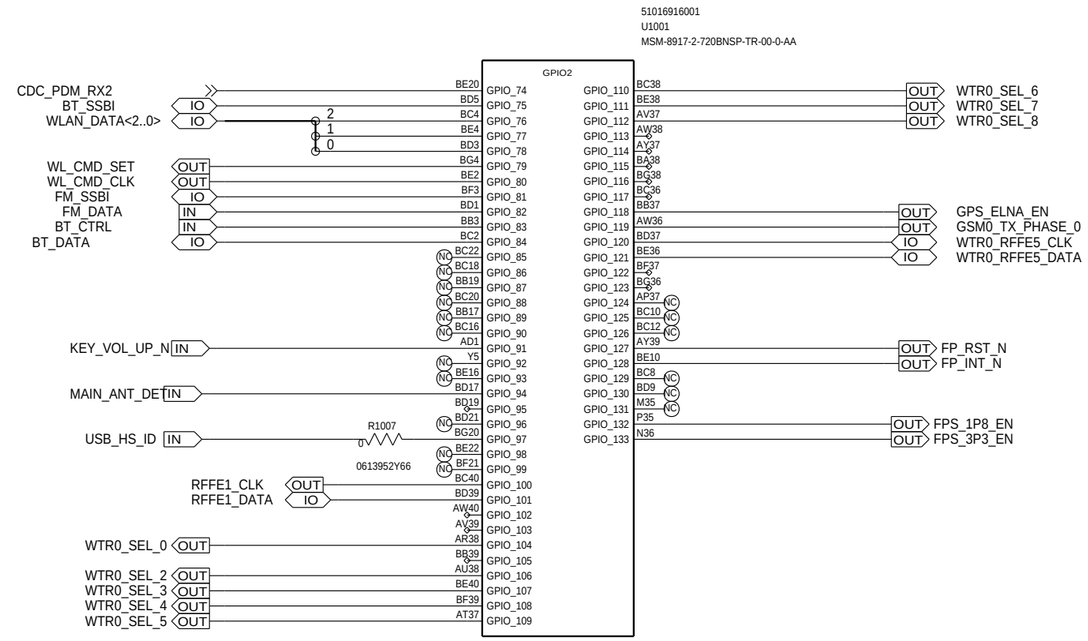

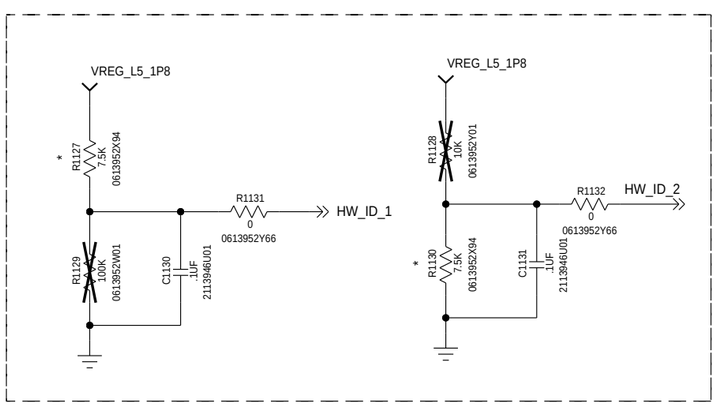

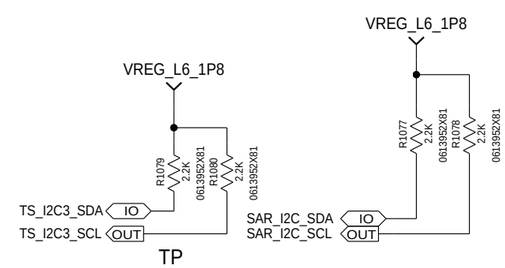

TP

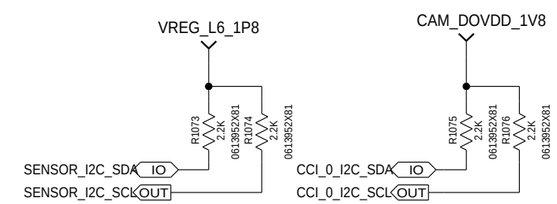

FRONT AND REAR CAMERA AND FLASH DRIVER

1100:MSM8917:PWR1
REF 1100-1159

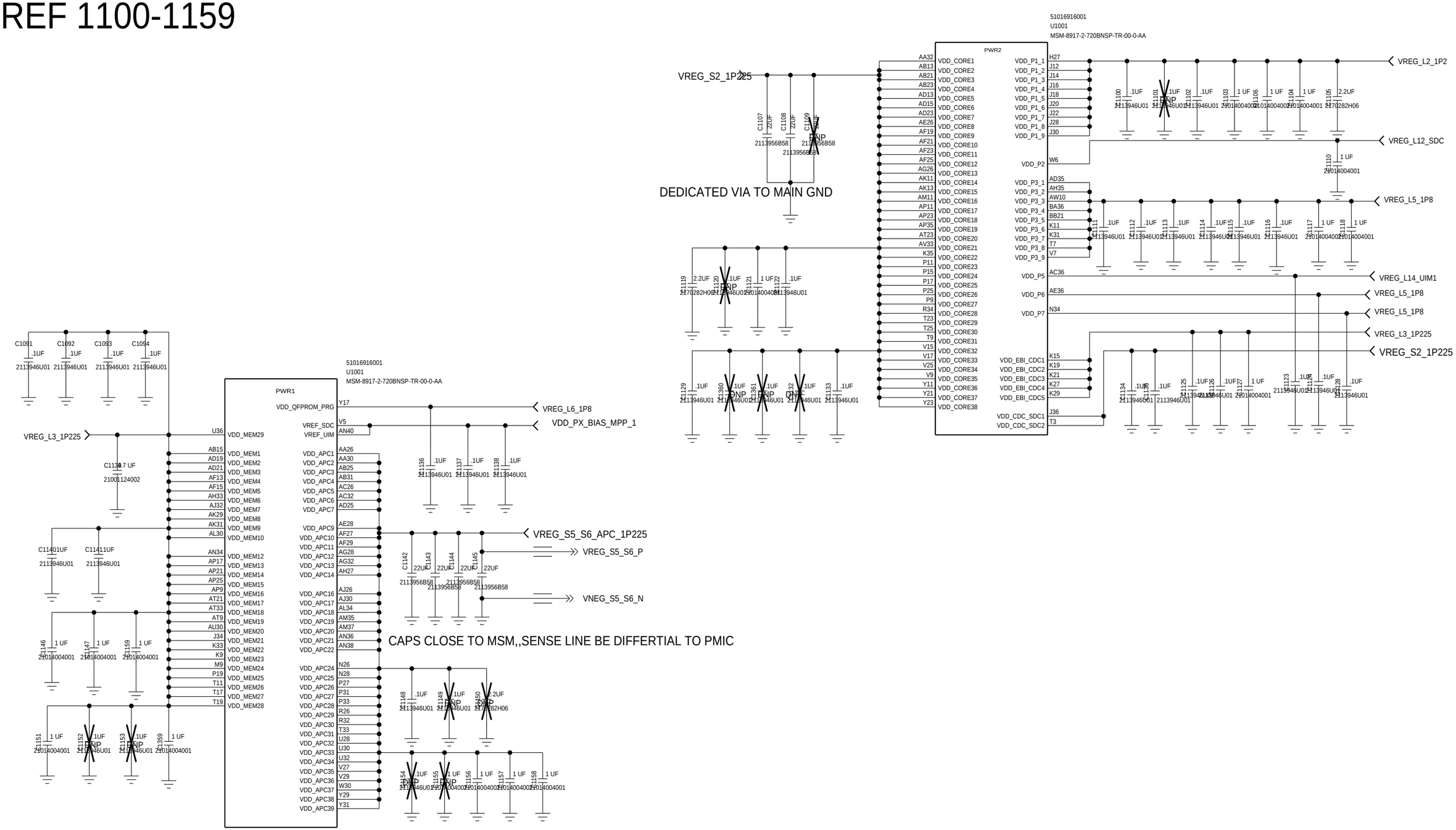

1160:MSM8917:PWR2
REF 000-499

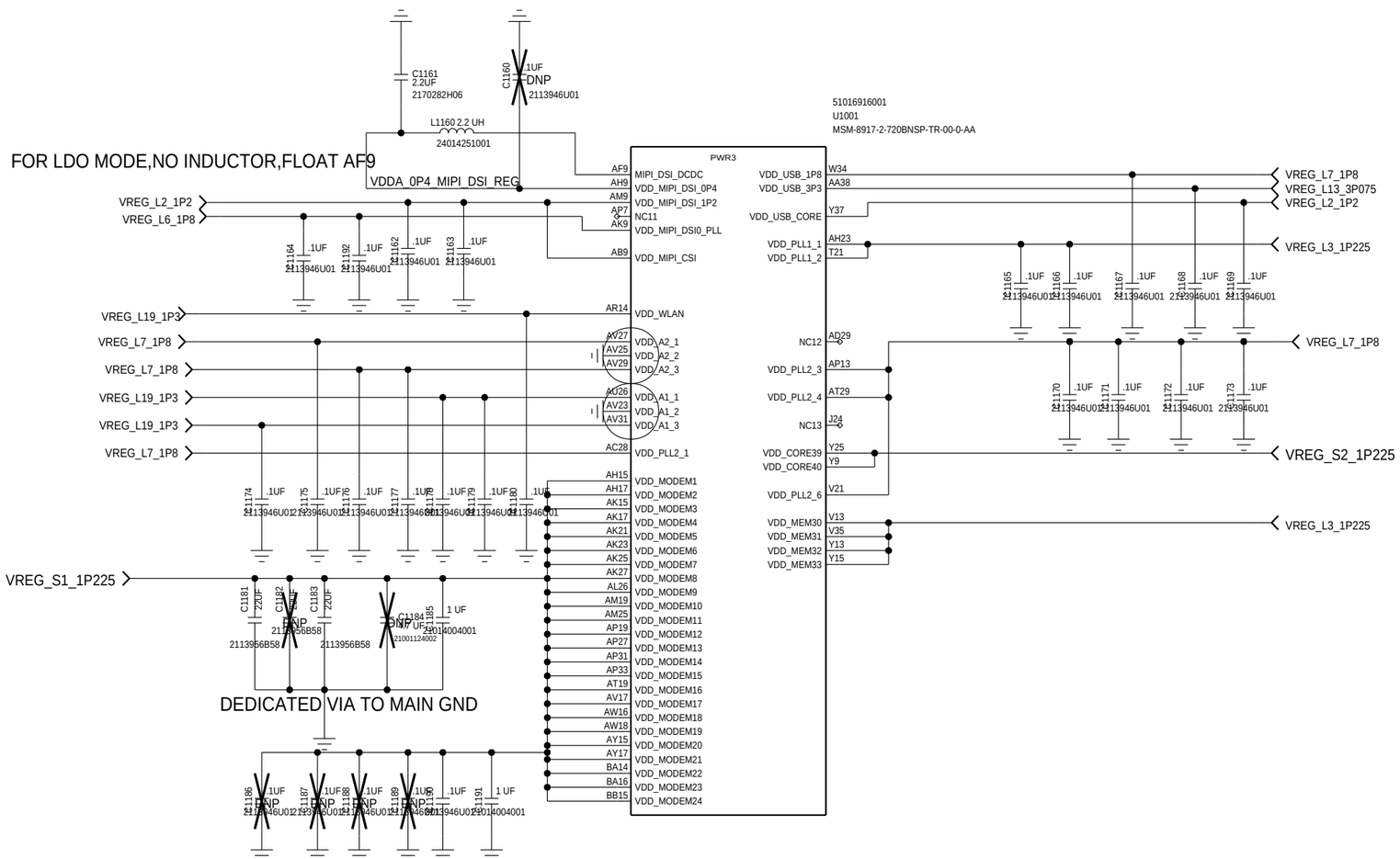

1200:MSM8917:GND
REF 000-499

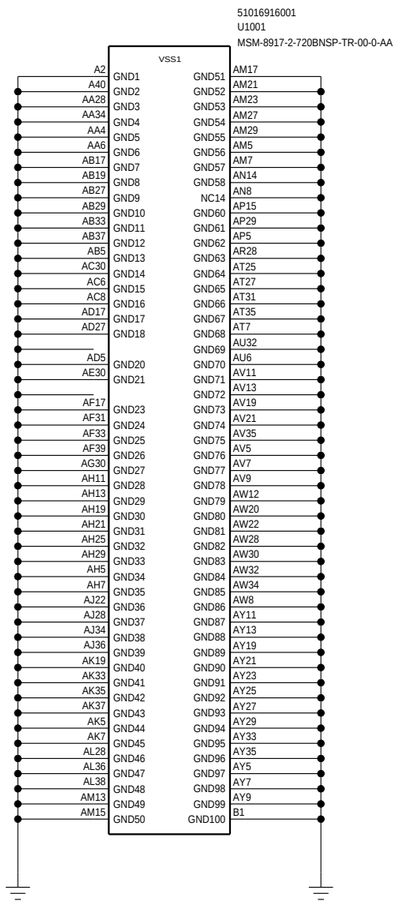

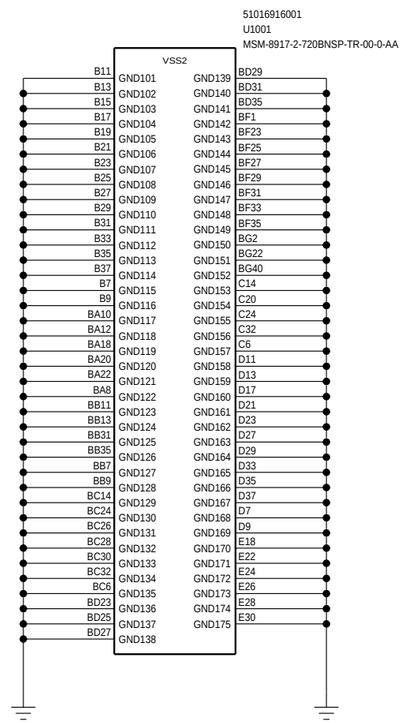

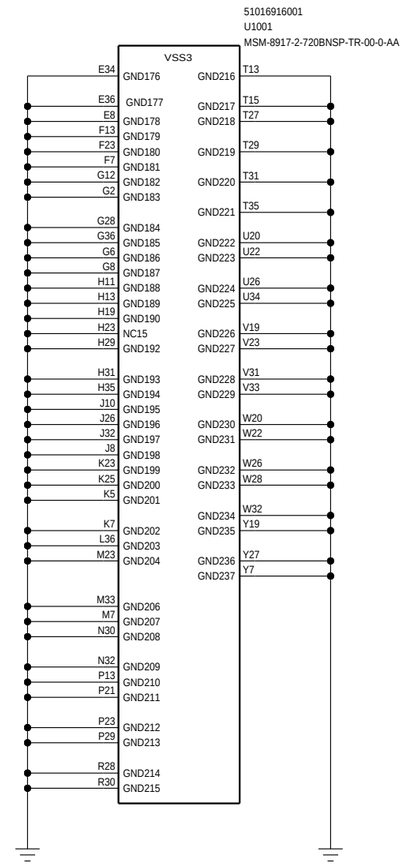

1200:PM8937: HK/GHRG/LED/GPIO

REF 1200-1219

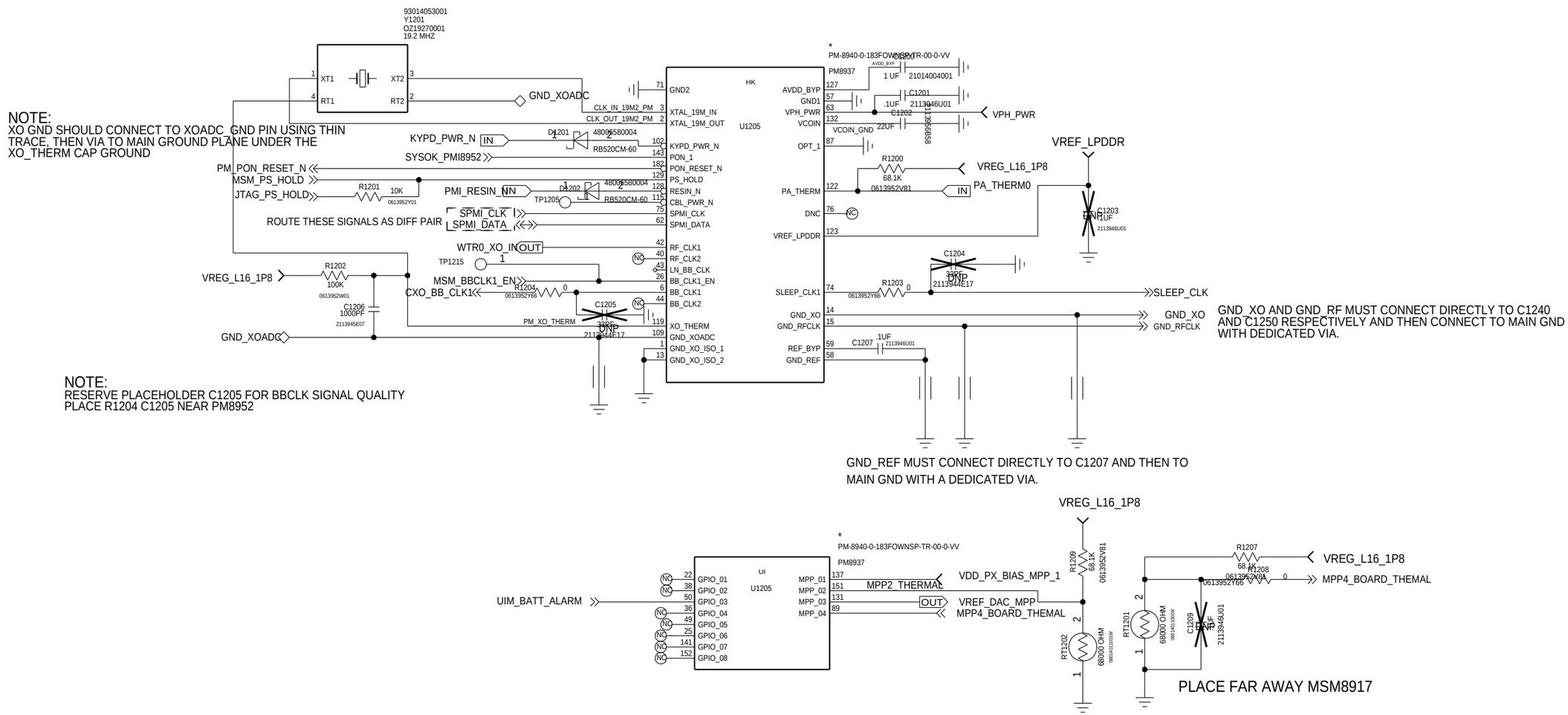

1220:PM8937: SMPS

REF 1220-1239

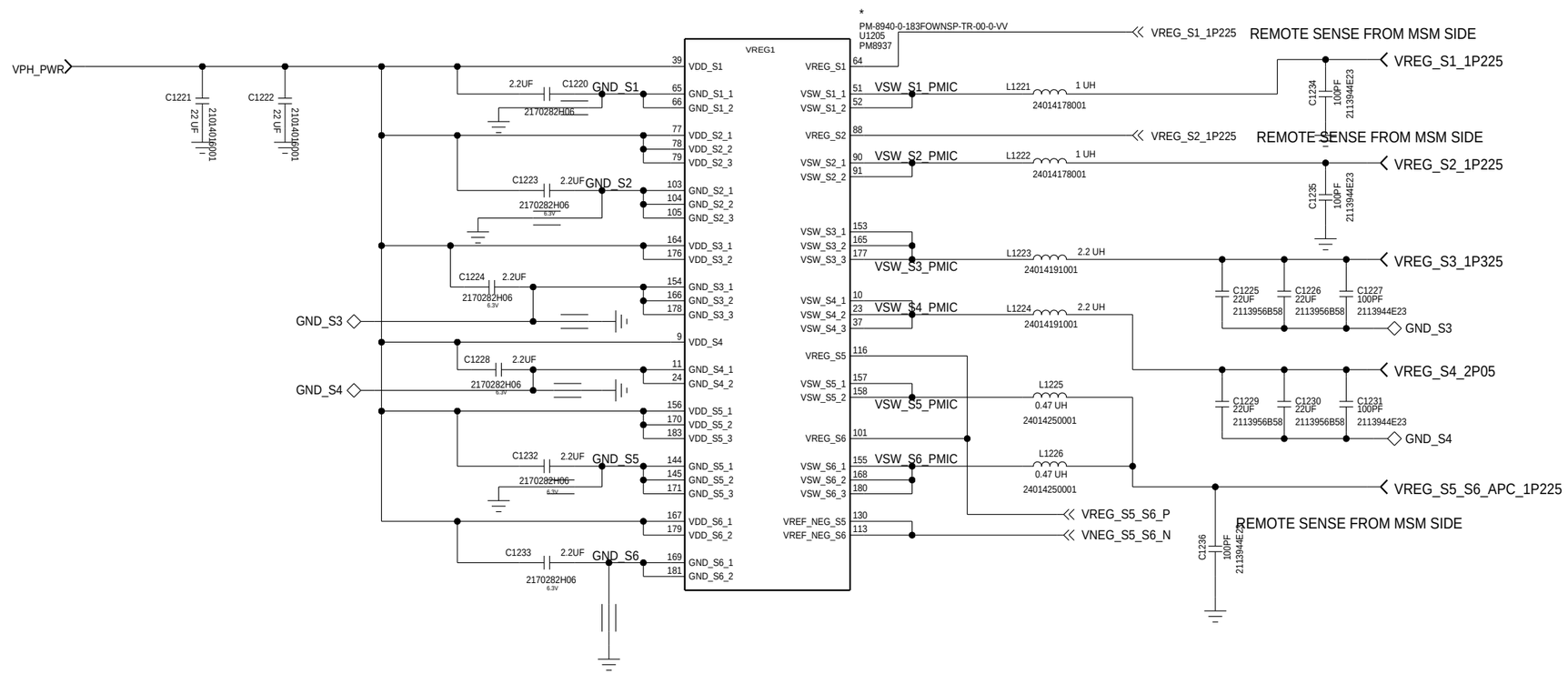

NOTE:

BUCK INPUT AND OUTPUT CAP GROUND OF EACH SWITCH REGULATOR SHOULD BE
DIRECTLY CONNECTED TO THEIR RESPECTIVE GND PINS, THEN CONNECT TO MAIN GROUND WITH DEDICATED VIAS

1240:PM8937: VREGS

REF 000-499

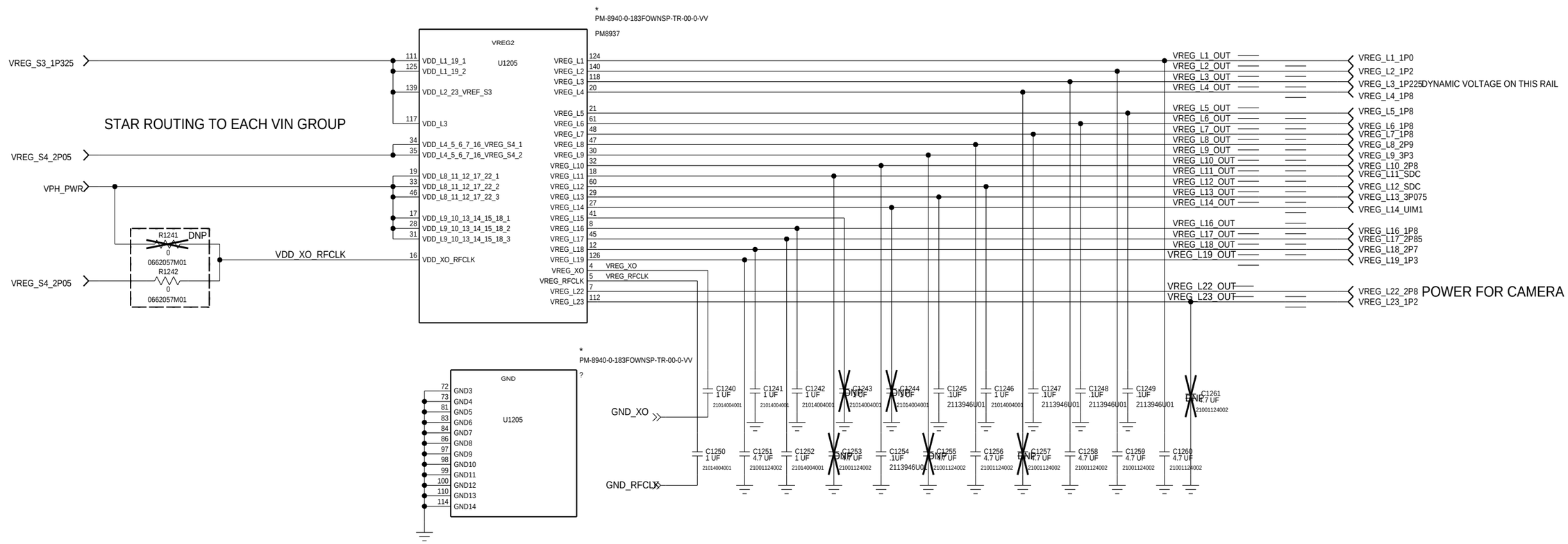

PSEUDO CAPLESS LDOS

L4*, L6, L8*, L9*, L10, L11*, L12, L14, L15, L17*, L18, L22, L23
L4*, L8*, L9*, L11*, L17*, STILL NEED VALIDATION AS PSEUDO-CAPLESS
L5, L7, L13, L16 HAVE INTERNAL PMIC LOADS AND REQUIRE LOCAL CAPS.

1270:PM8937:CODEC

REF 1270-1299

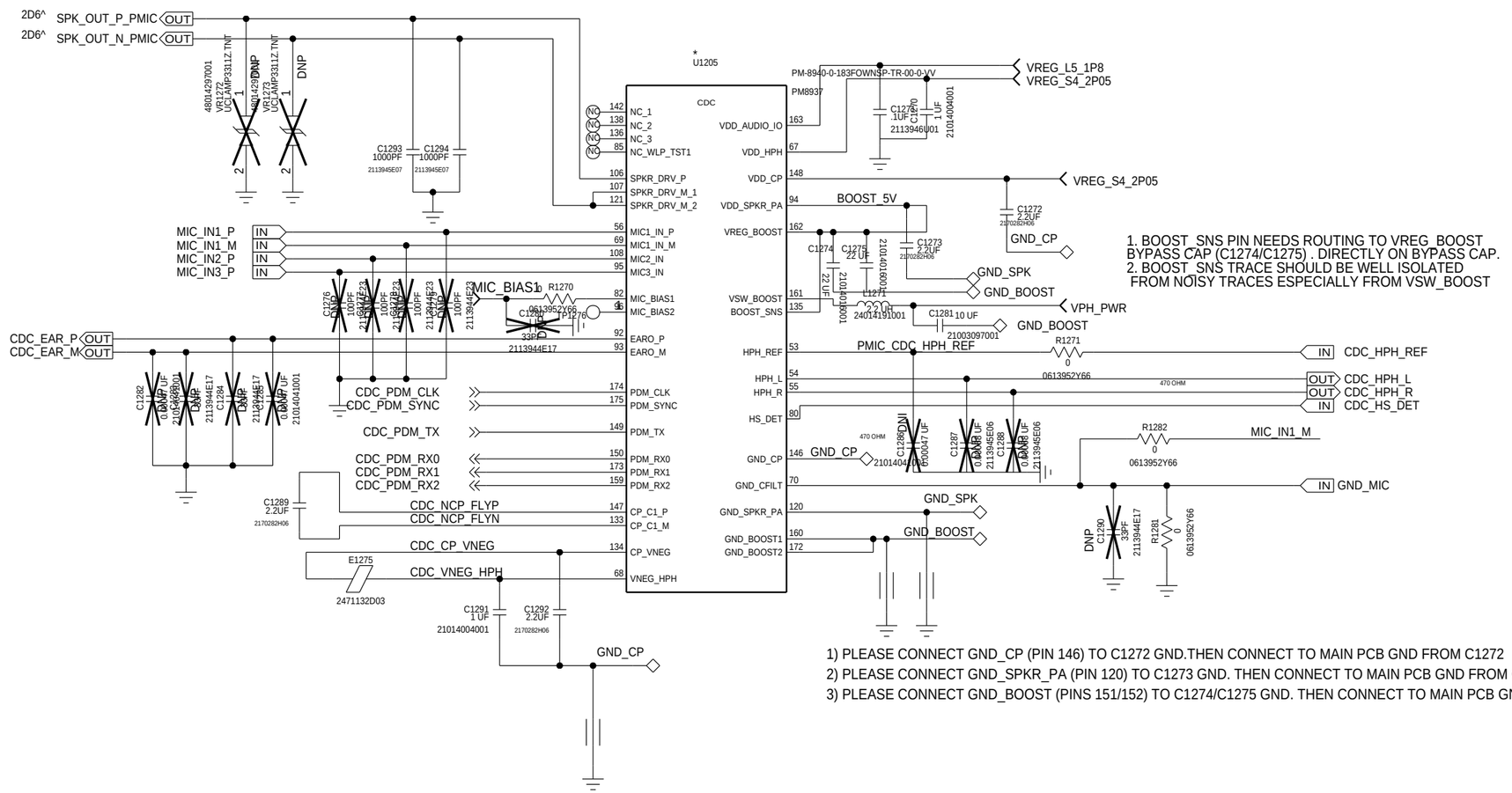

1300:PMI8952: CHARGING

REF 1300-1319

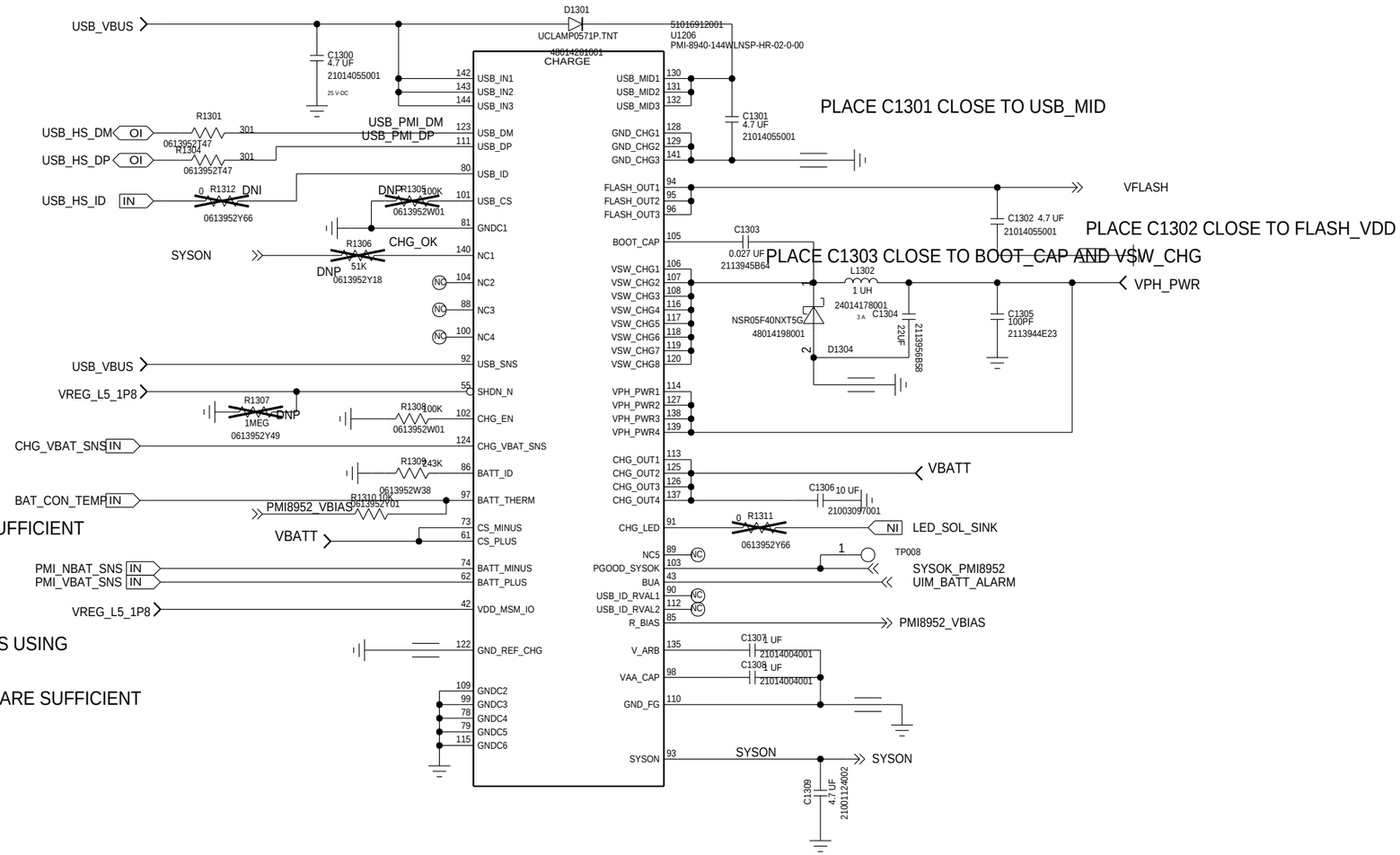

1320:PMI8952: IO_REF

REF 000-499

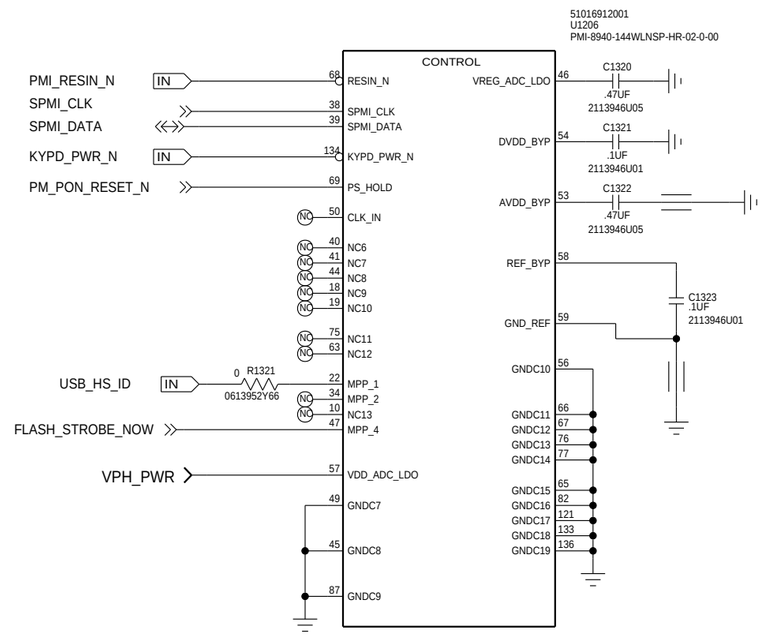

1330:PMI8952: REG_WLED

REF 1330-1339

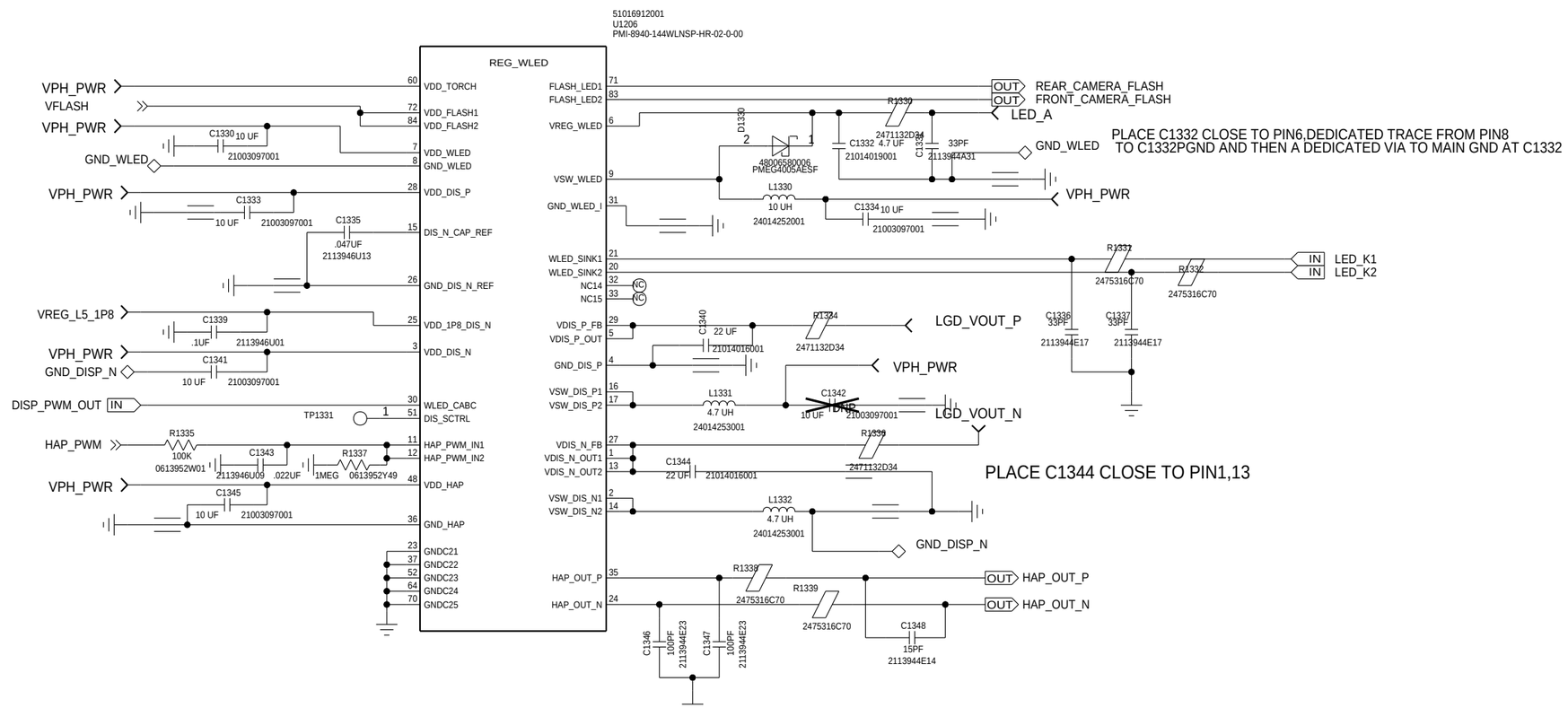

1450:MIC/SPK

REF 1450-1469

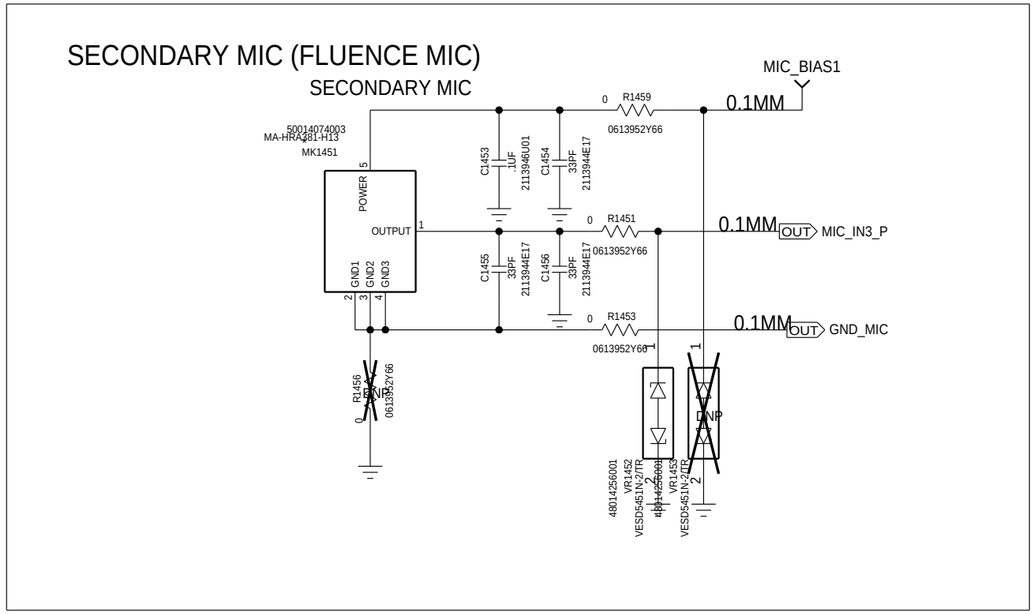

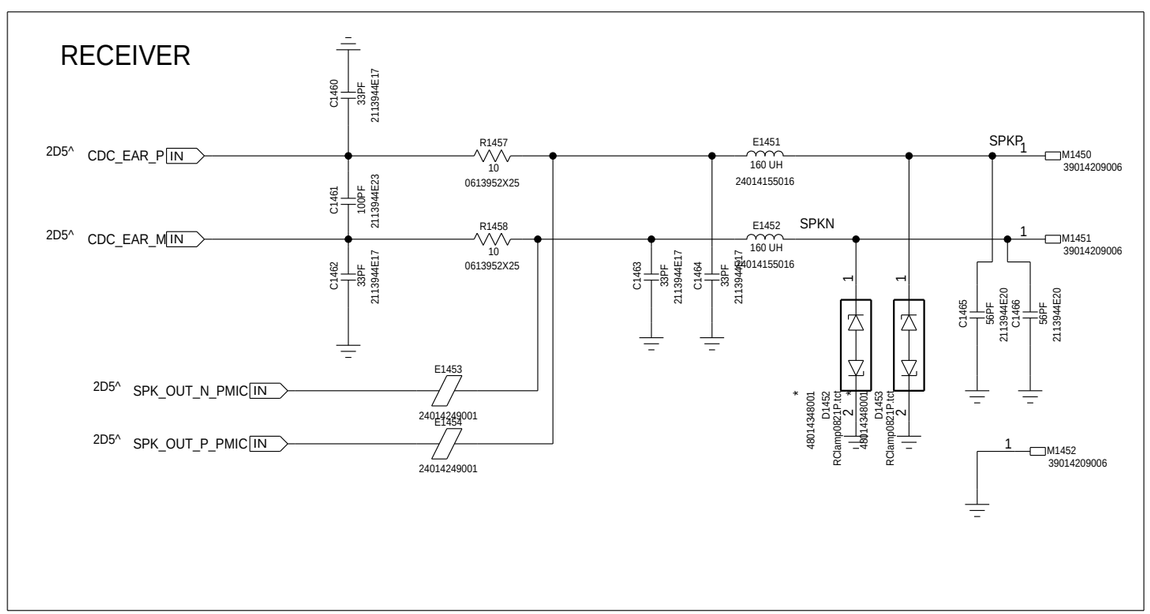

1470:earphone jack

REF 1470-1489

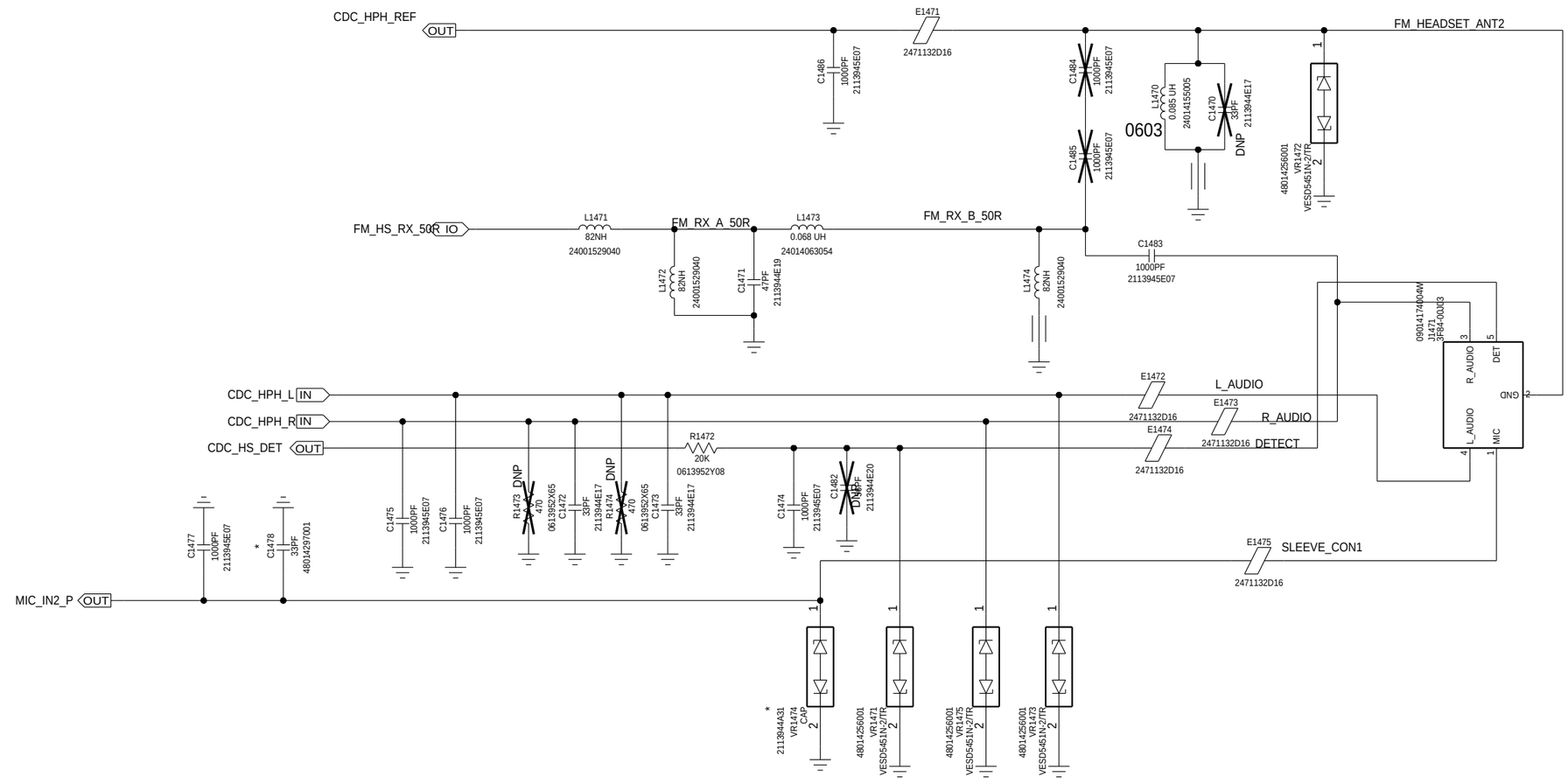

1500:Sub board_connector

REF 1500-1599

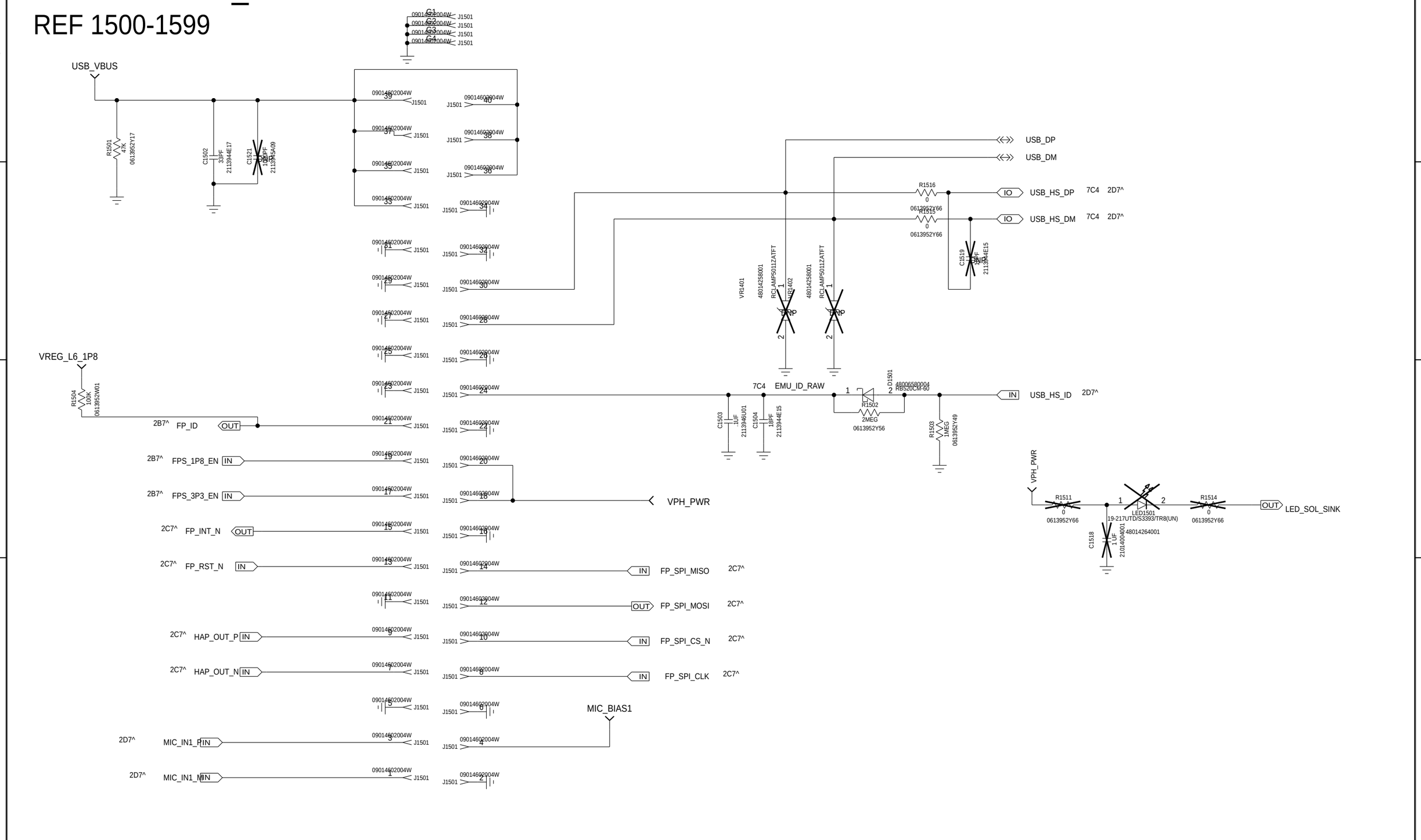

1600:Test point and Shield
REF 1600-1699

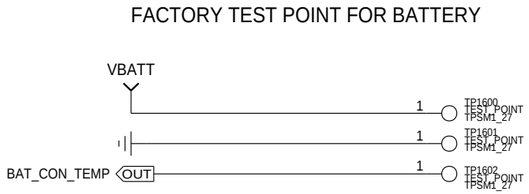

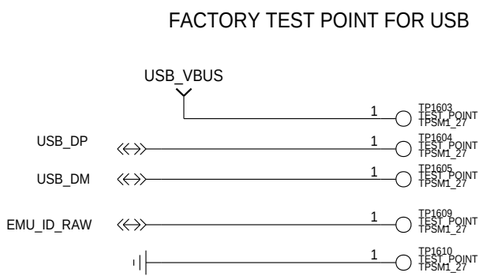

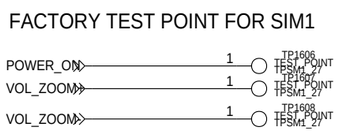

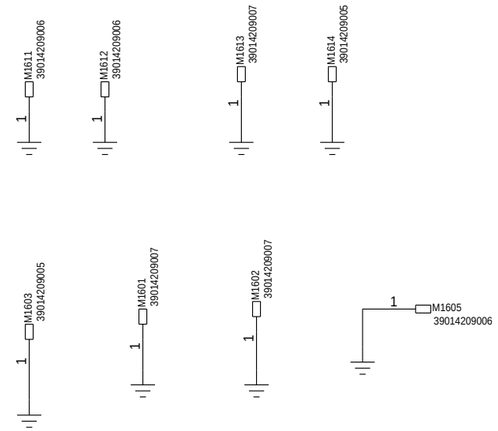

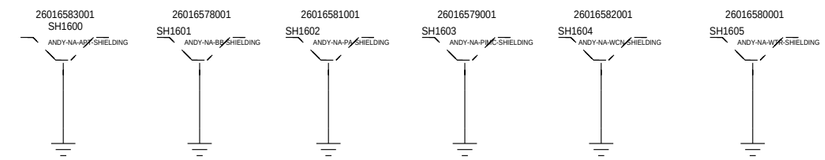

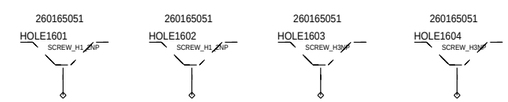

1800:SIM/SD_CONN
REF 1800-1819

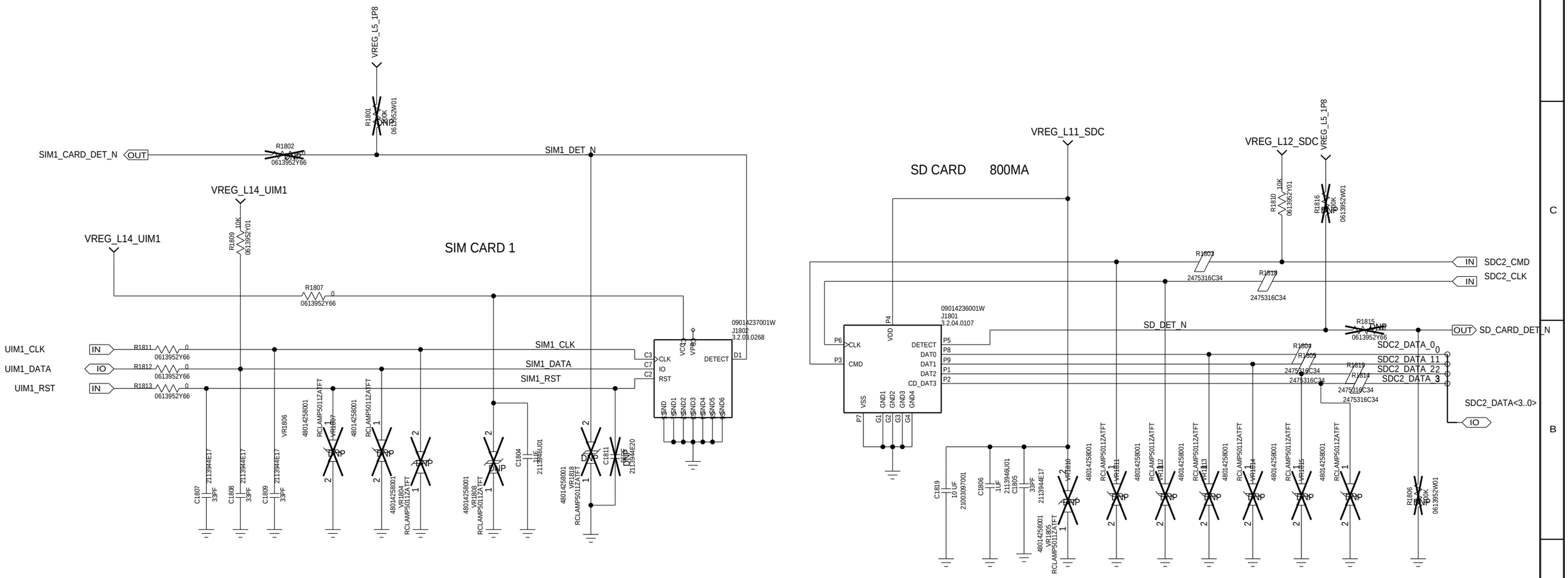

1820:KEYPAD

REF 1820-1830

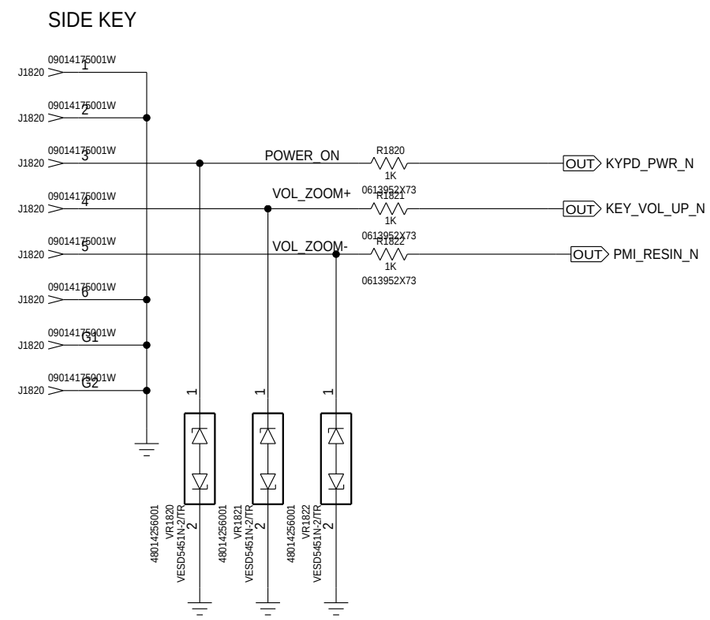

1900:BROADCOM NFC

REF 1900-1999

2500:sensor

REF 2500-2509

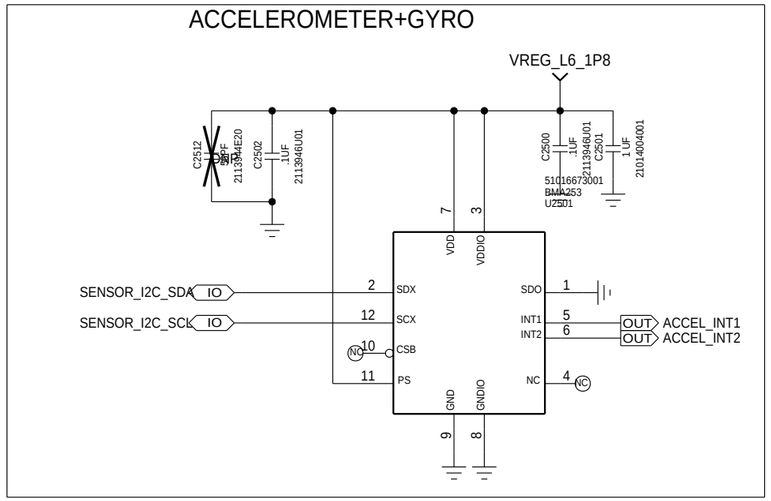

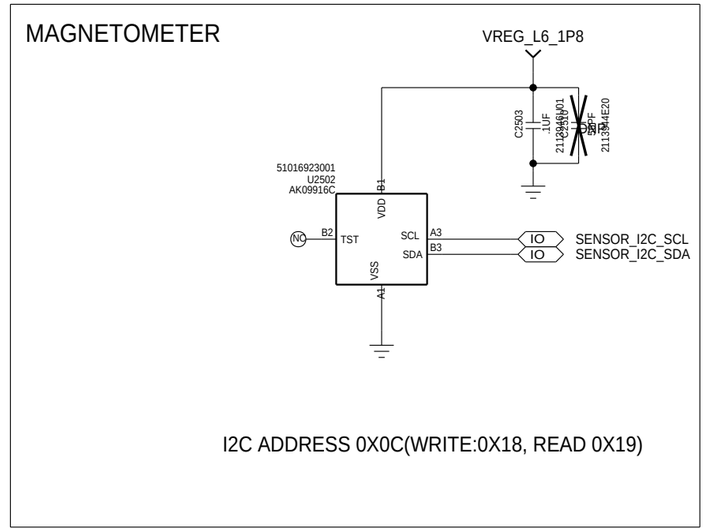

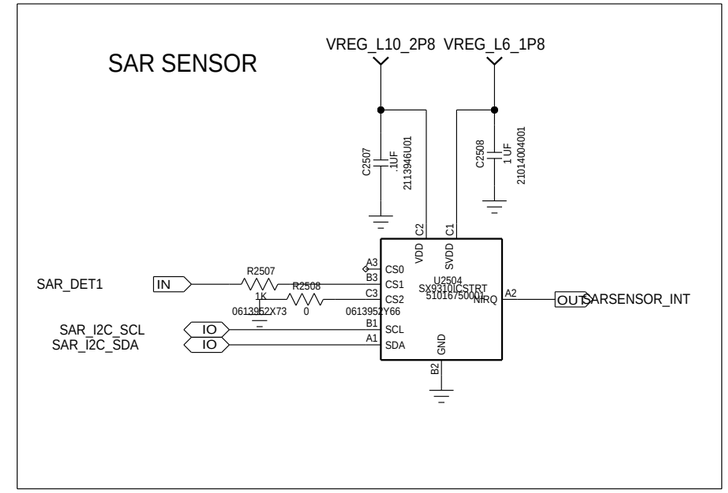

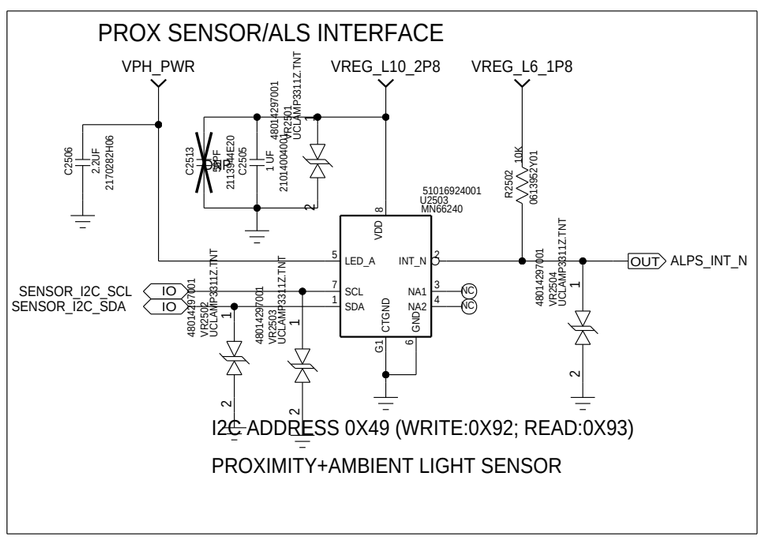

2000:LCD

REF 2000-2049

TP: S3203 I2C ADD:0X20; WRITE:0X40; READ: 0X41

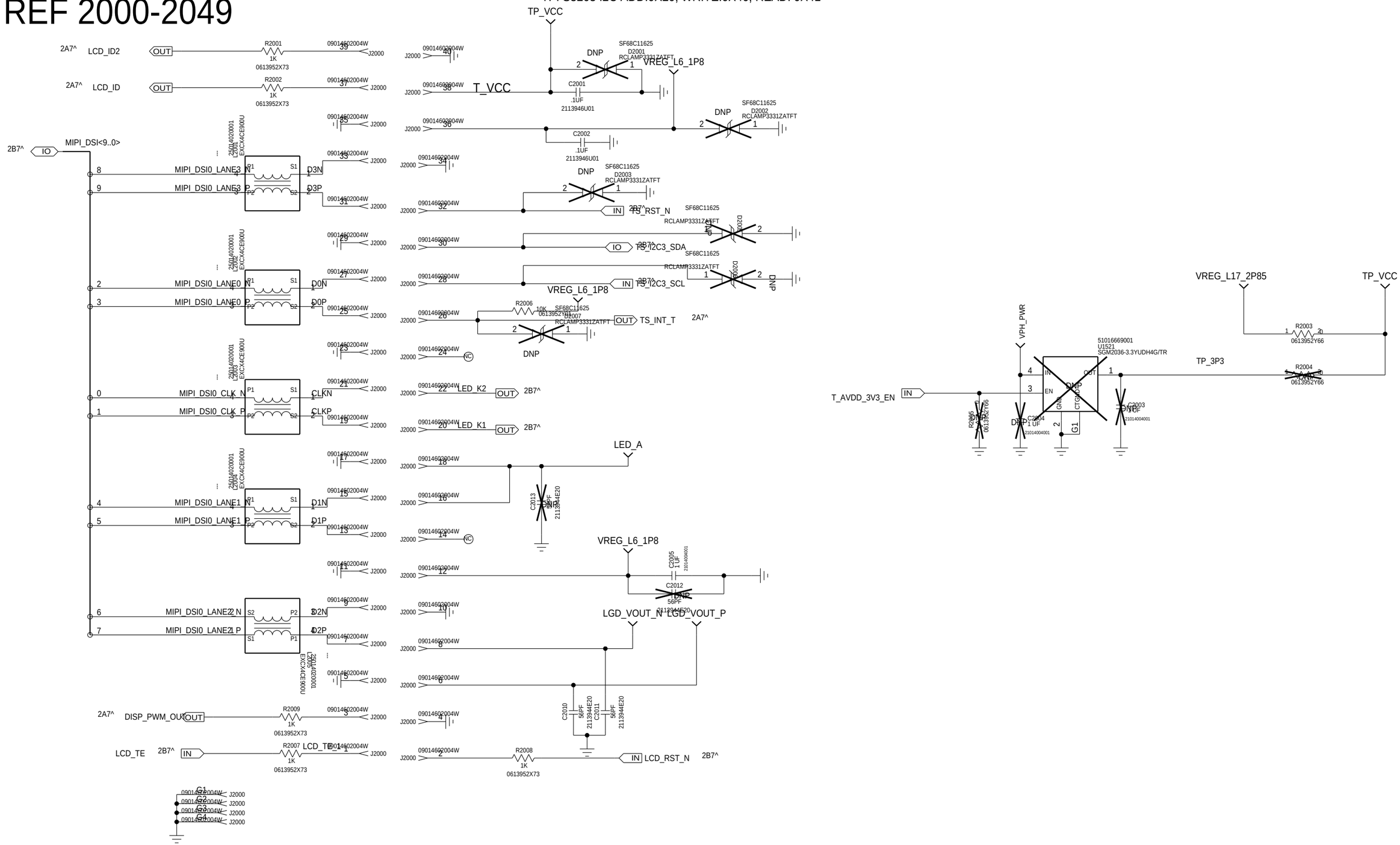

2100:FRONT camera
REF 2100-2149

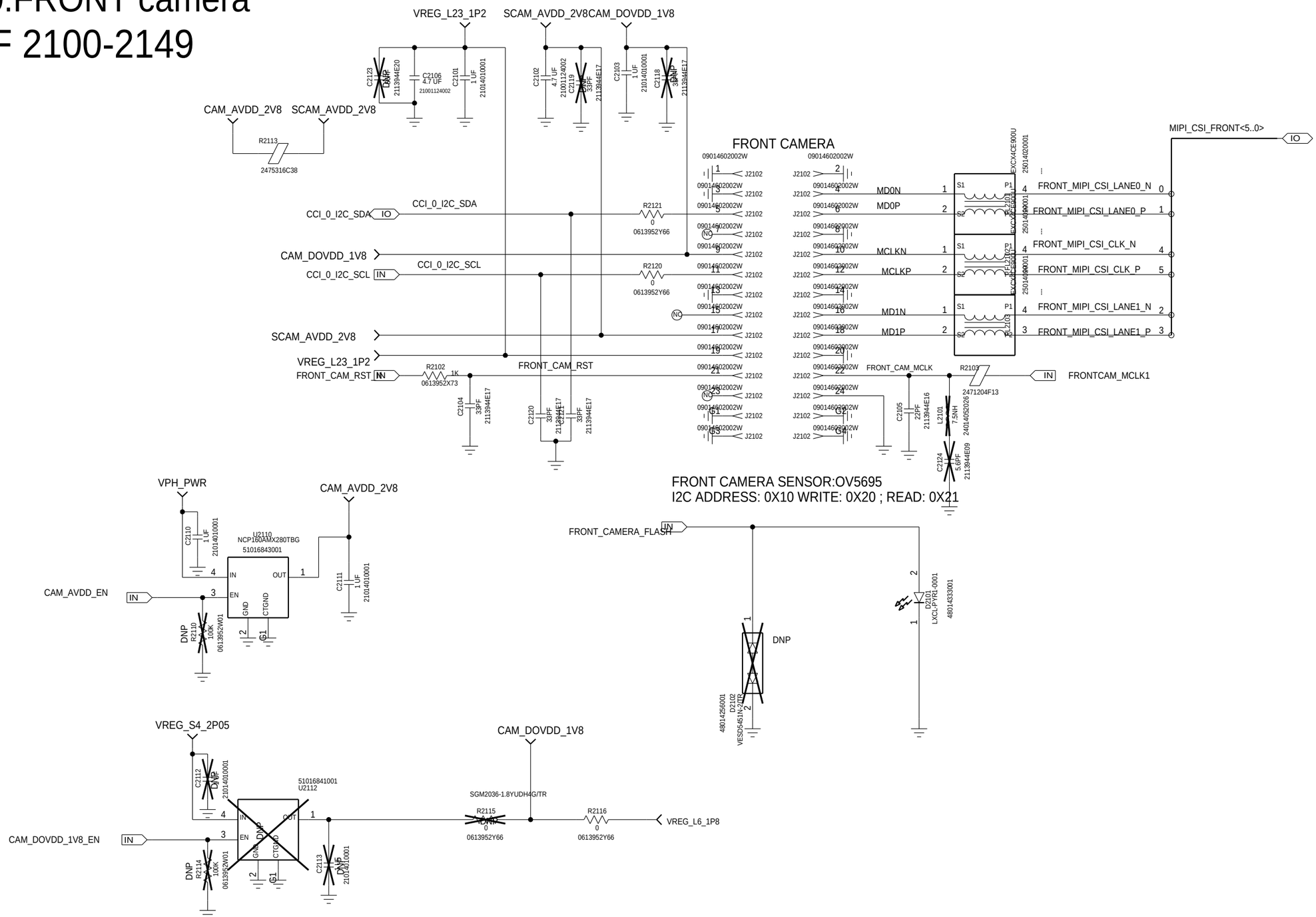

2150:REAR CAMERA

REF 2150-2199

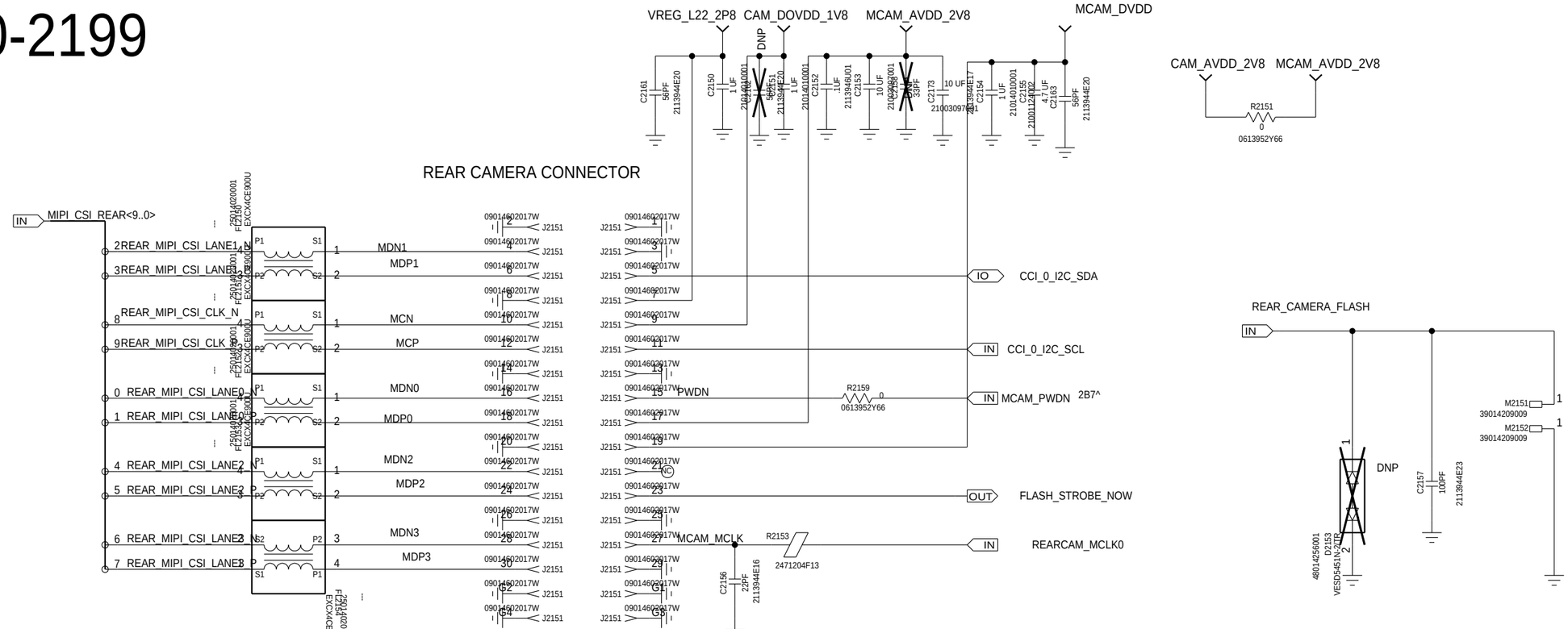

REAR CAMERA SENSOR:OV8865 I2C ADDRESS: 0X56; WRITE:0XAC'READ:0XAD
REAR CAMERA: DRIVER IC I2C ADDRESS:0X0C; WRITE:0X18;READ:0X19

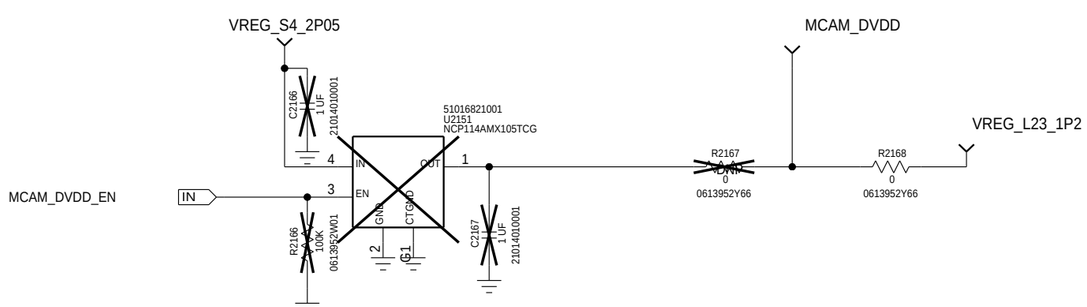

1420:BATT_CONN

REF 1420-1439

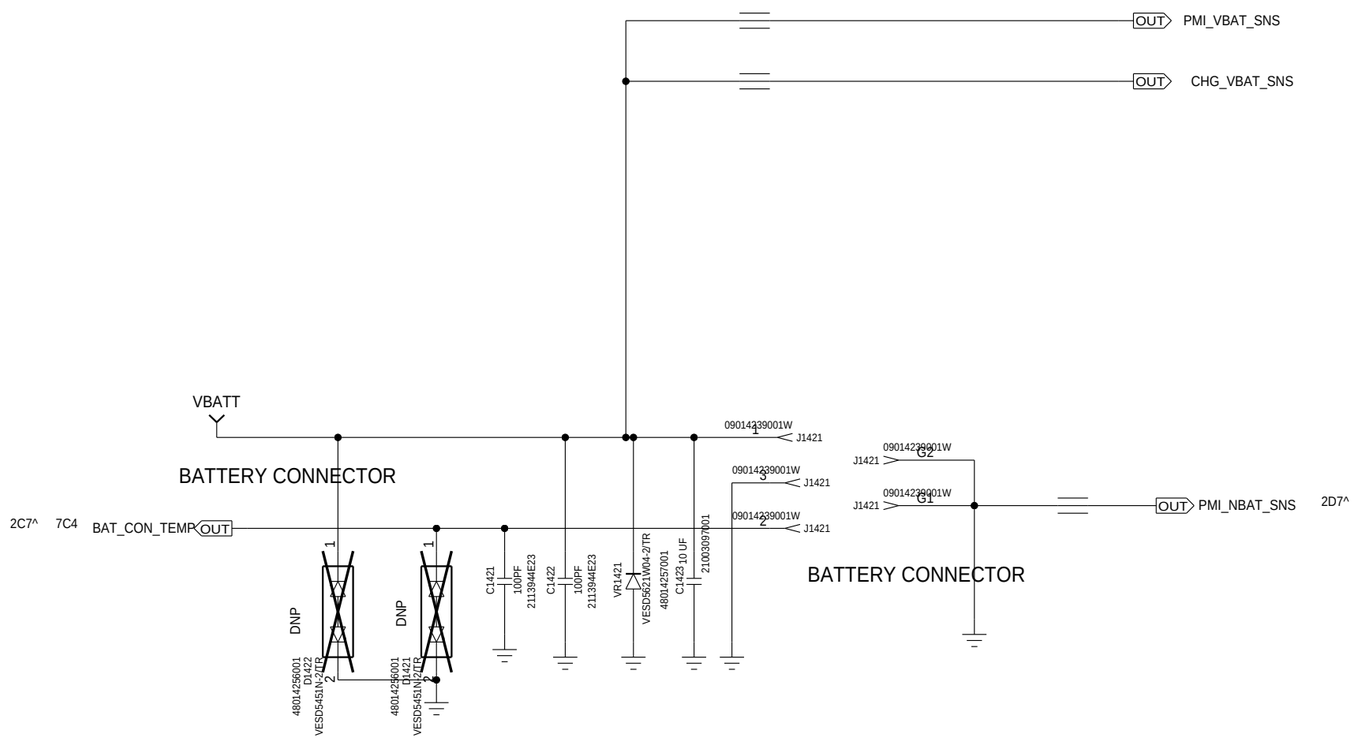

5000:rf interface

REF 5000-5499

MSM8916 RF INTERFACE

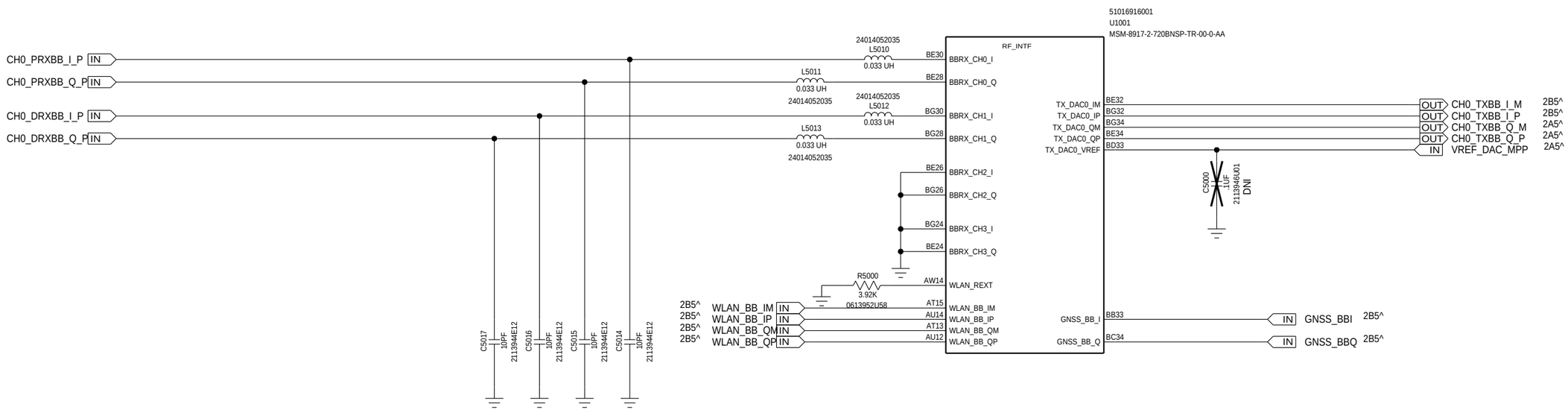

5500:wtr2965-0
REF 5500-5999

WTR2965 CONTROL,PWR&GND

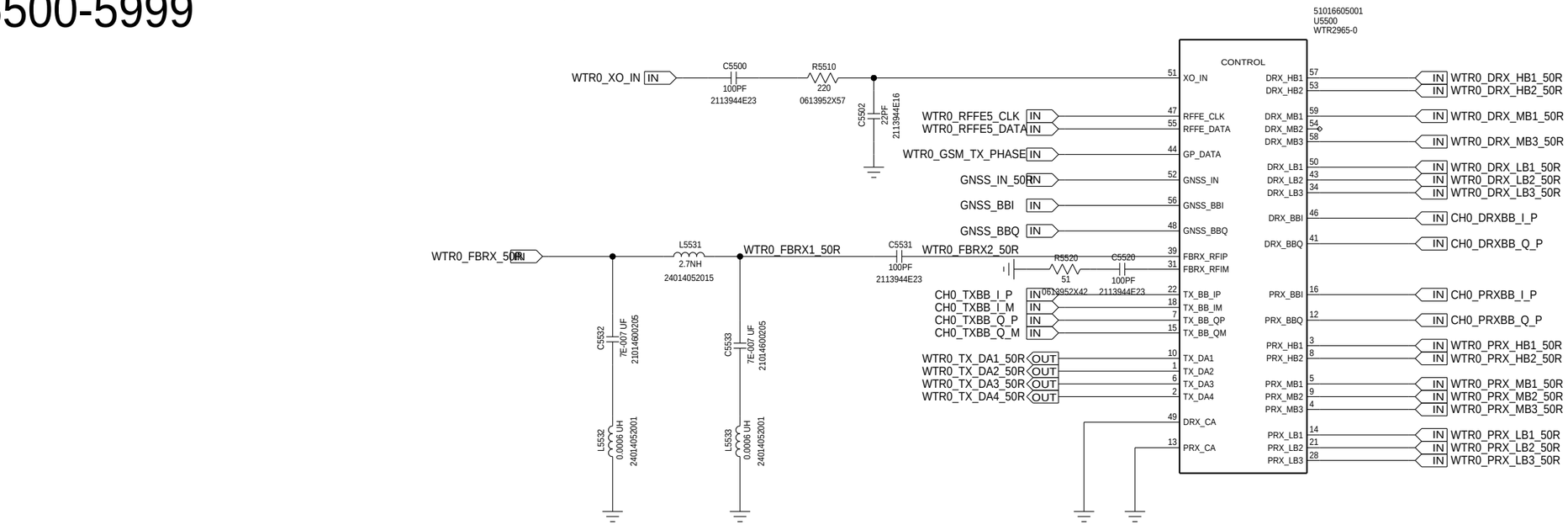

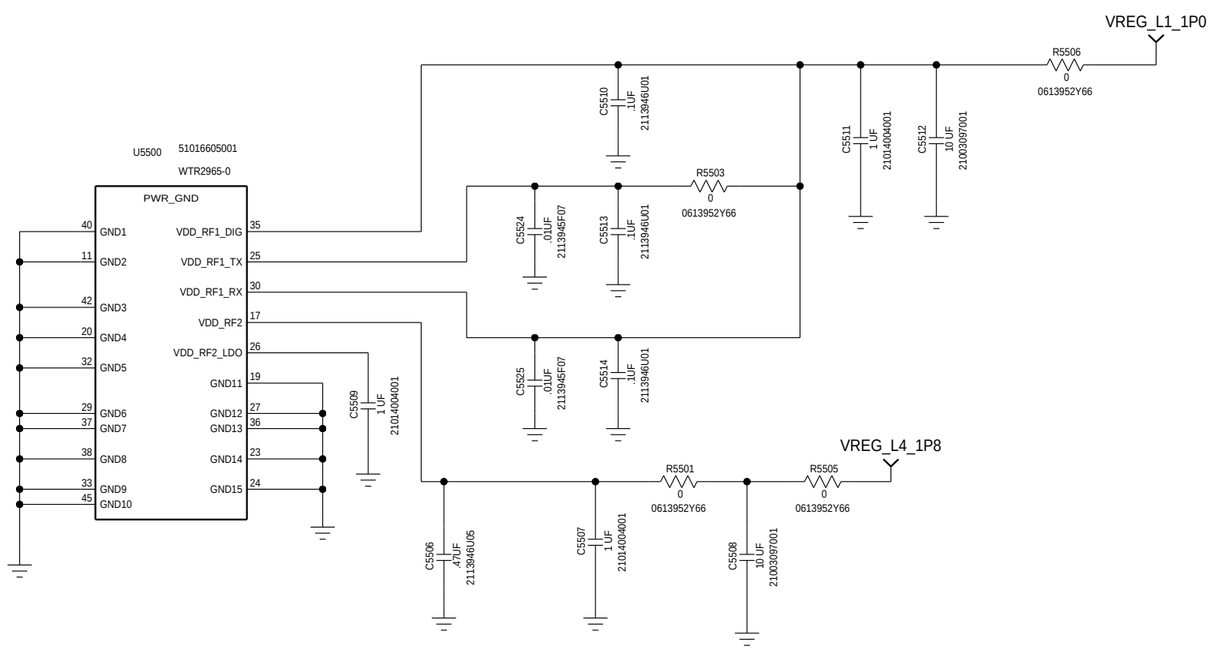

5600:wtr2965-1
REF 5600-5699

ASM_SKY77916
REF 6000-6099

TXM_SKY77916

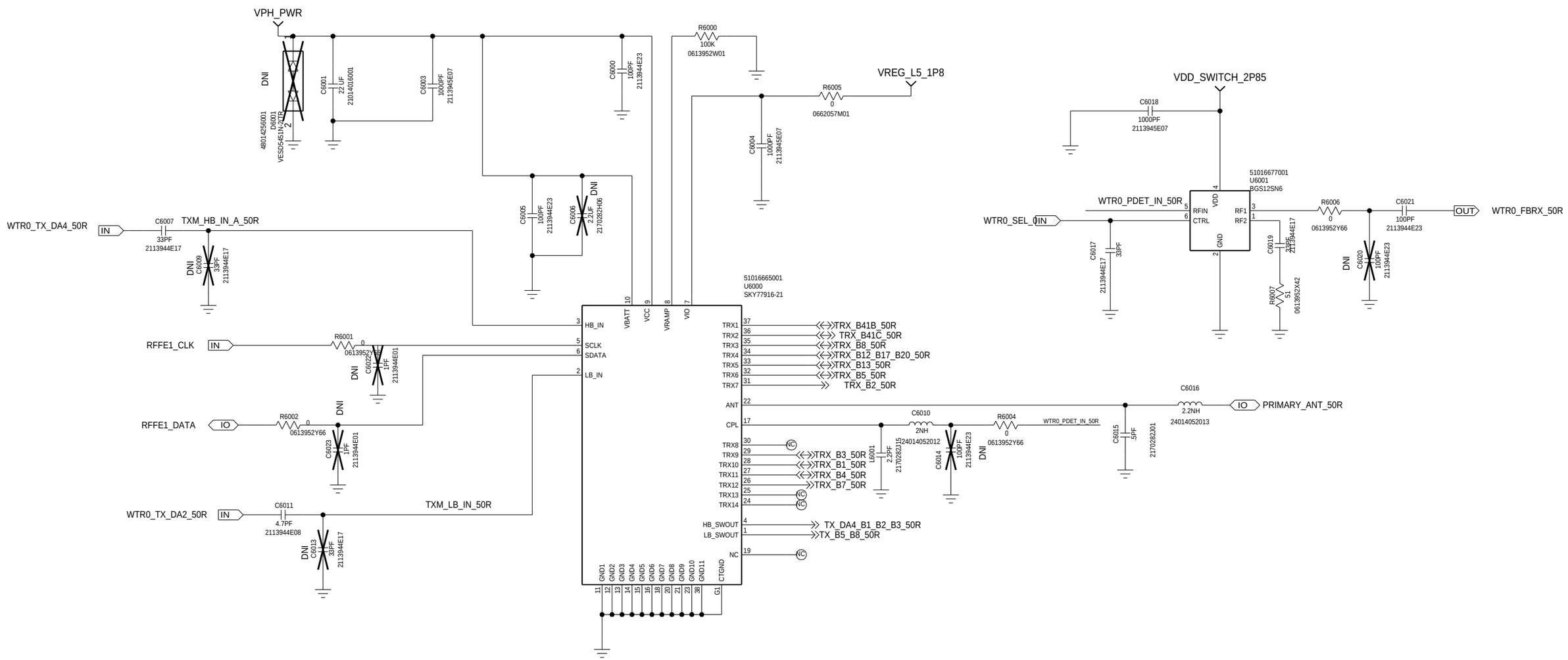

PA_SKY77643
REF 6100-6199

PA_SKY77643

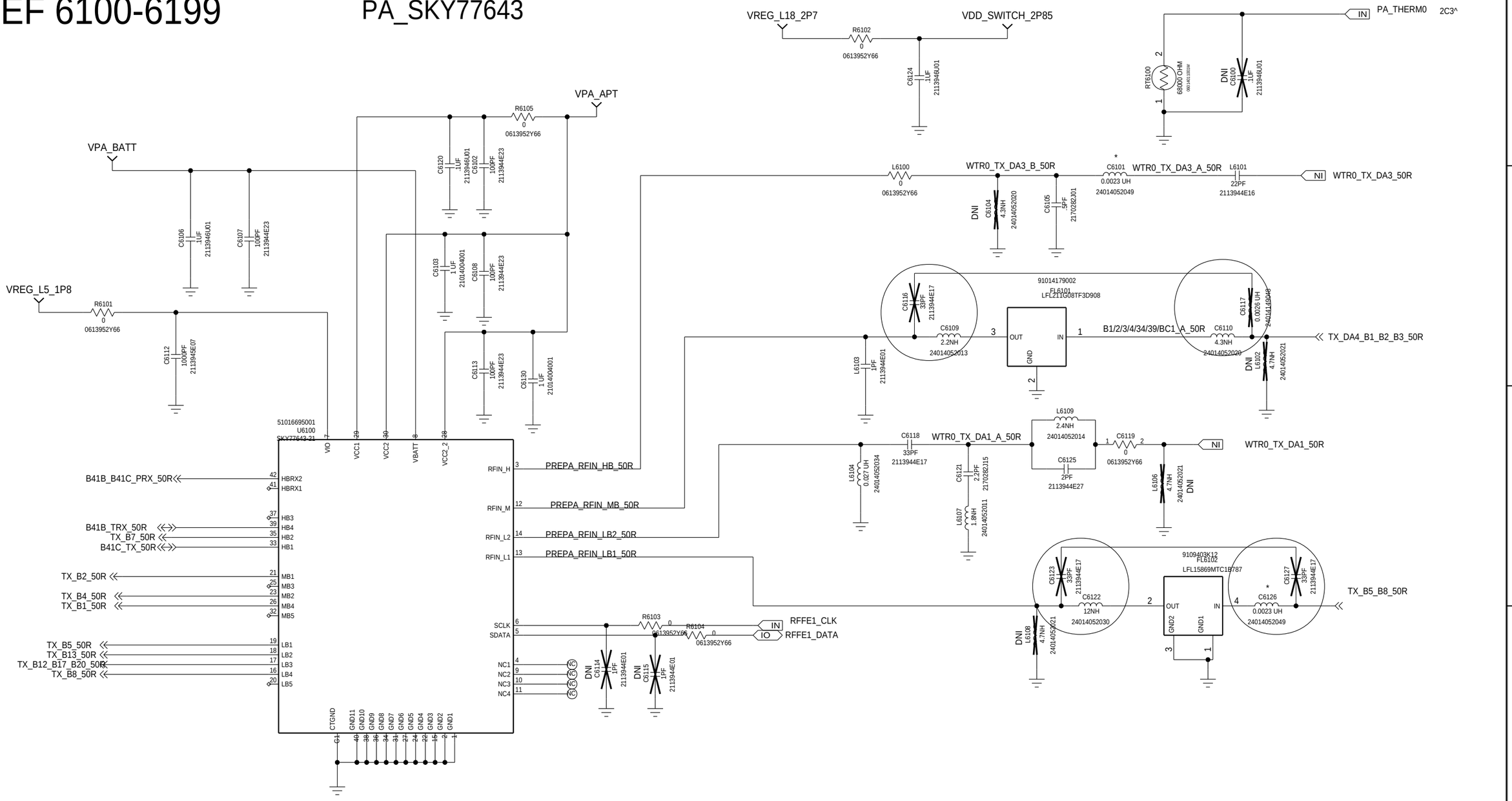

HB_TRX_B7,41
REF 6200-6299

HB_TRX

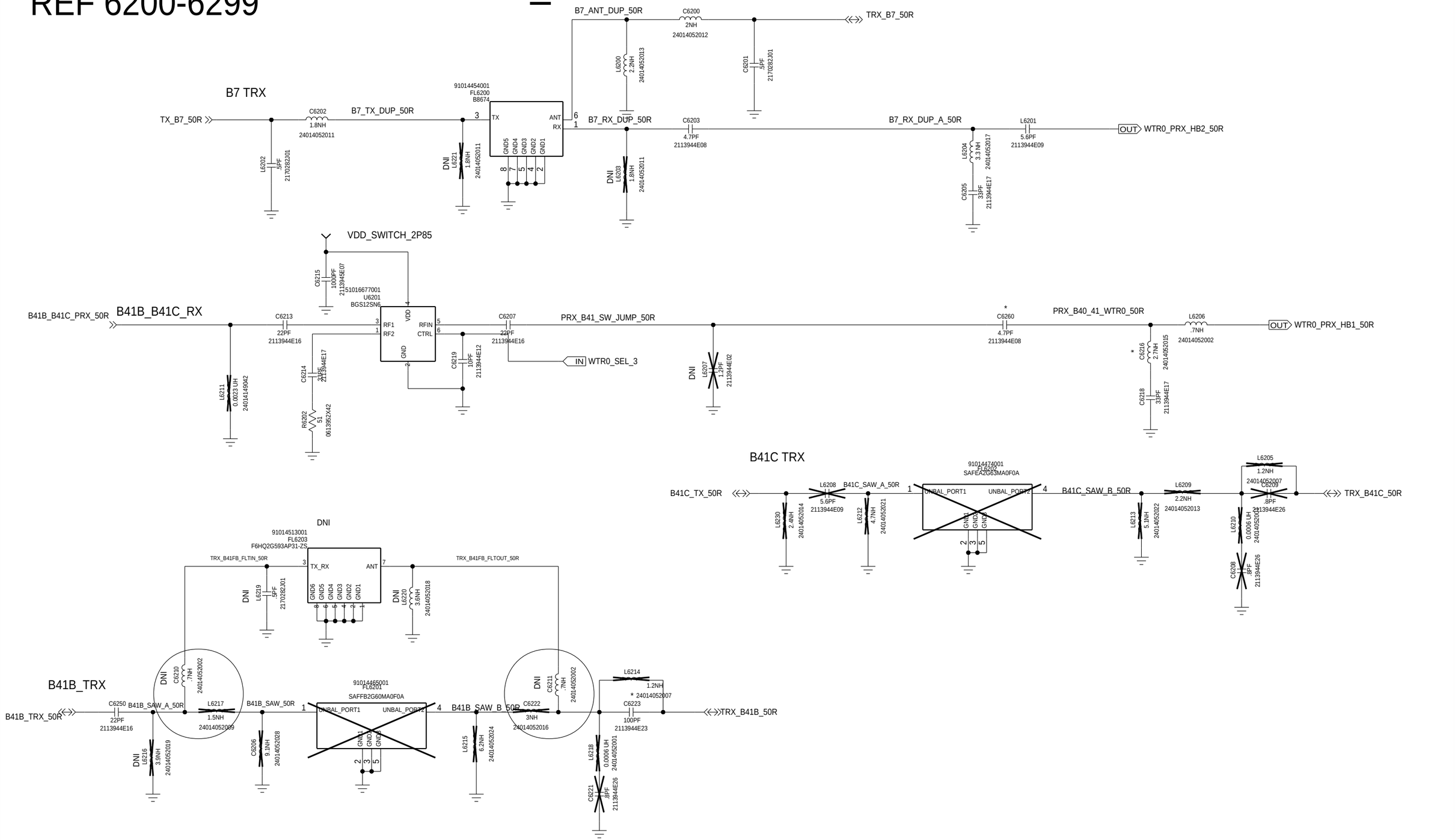

MB_TRX_B1,4,66
REF 6300-6399

MB_TRX

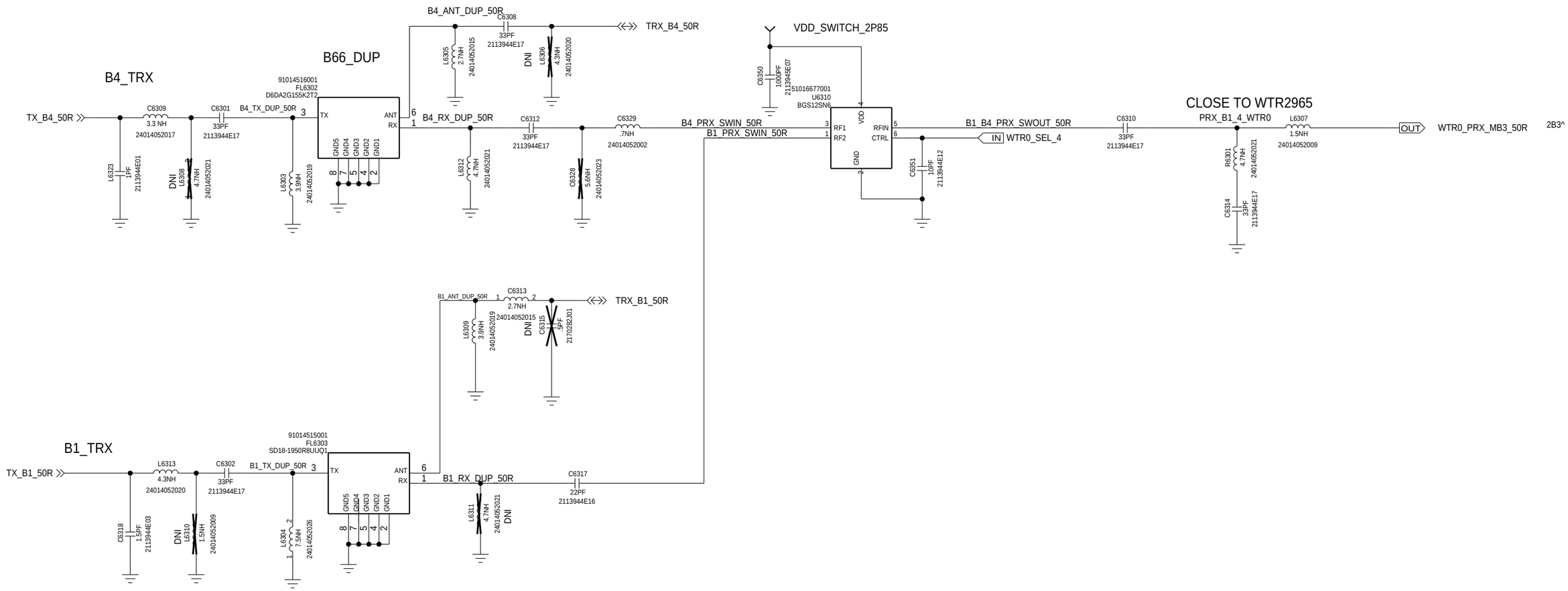

MB_TRX_B2,3
REF 6400-6499

MB_TRX
REF:6400-6499

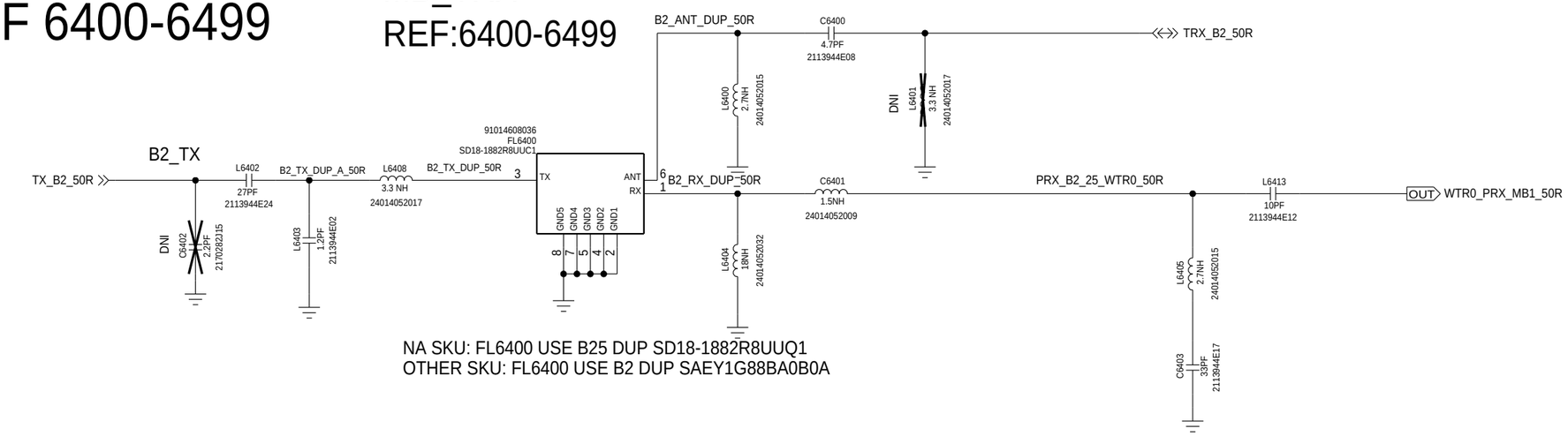

NA SKU: FL6400 USE B25 DUP SD18-1882R8UUQ1
OTHER SKU: FL6400 USE B2 DUP SAEY1G88BA0B0A

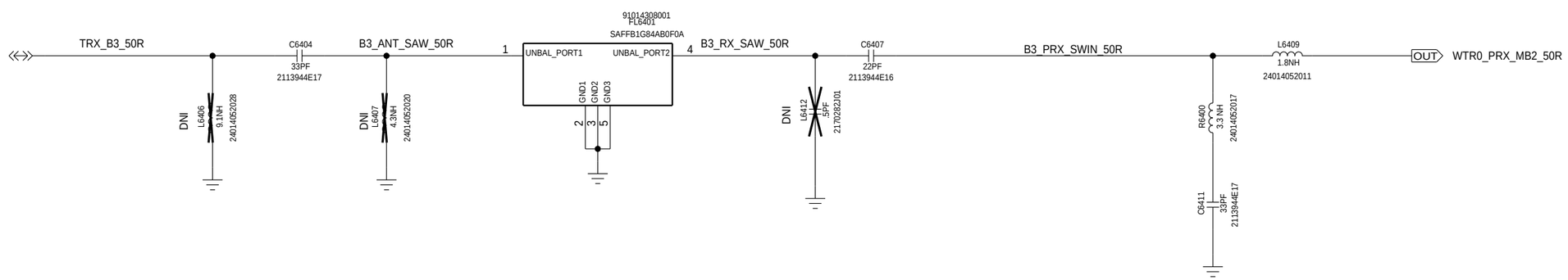

LB_TRX_B12,13,17
REF 6500-6599

LB_TRX

REF:6500-6599

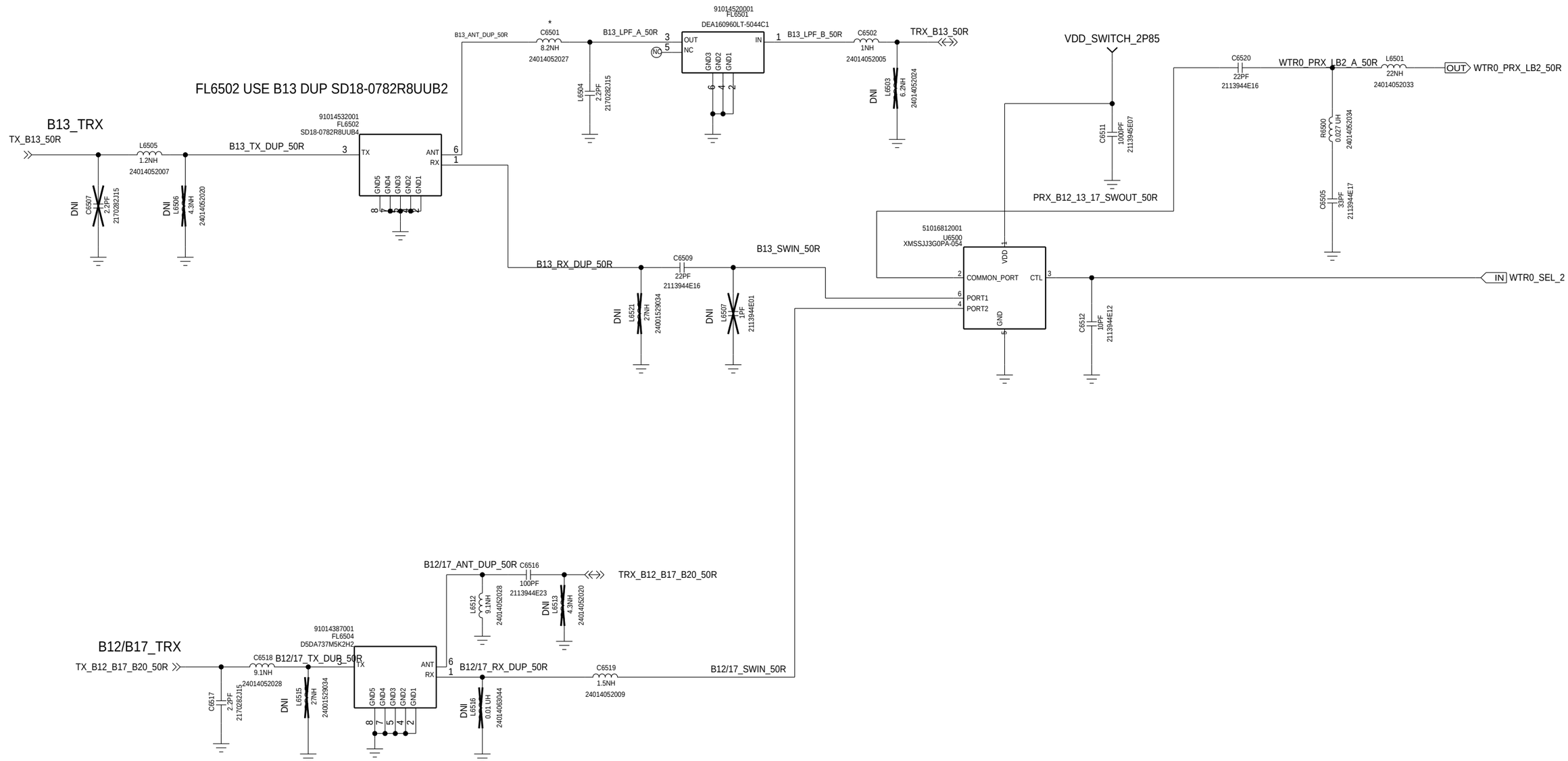

LB_TRX_B5,8
REF 6670-6699

LB_TRX
REF:6600-6699

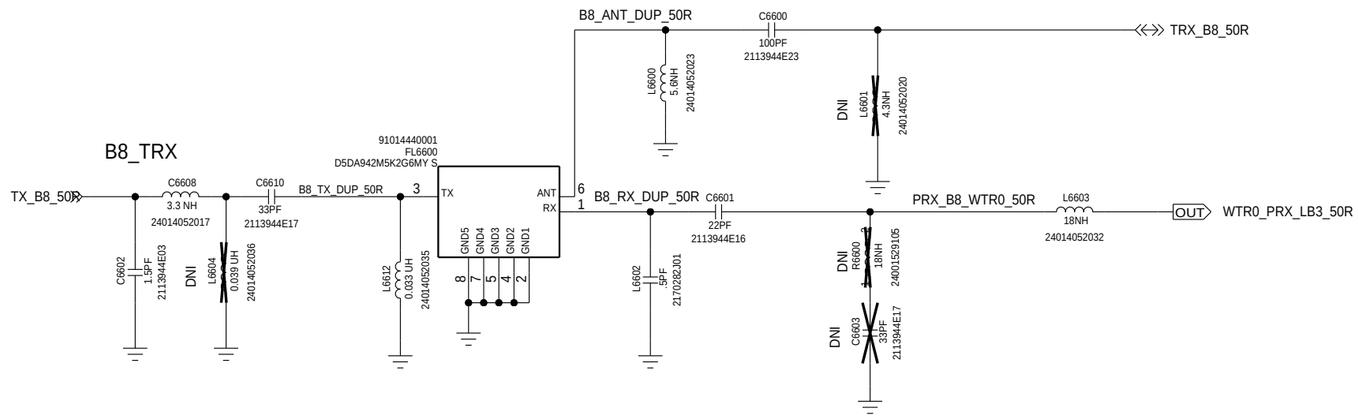

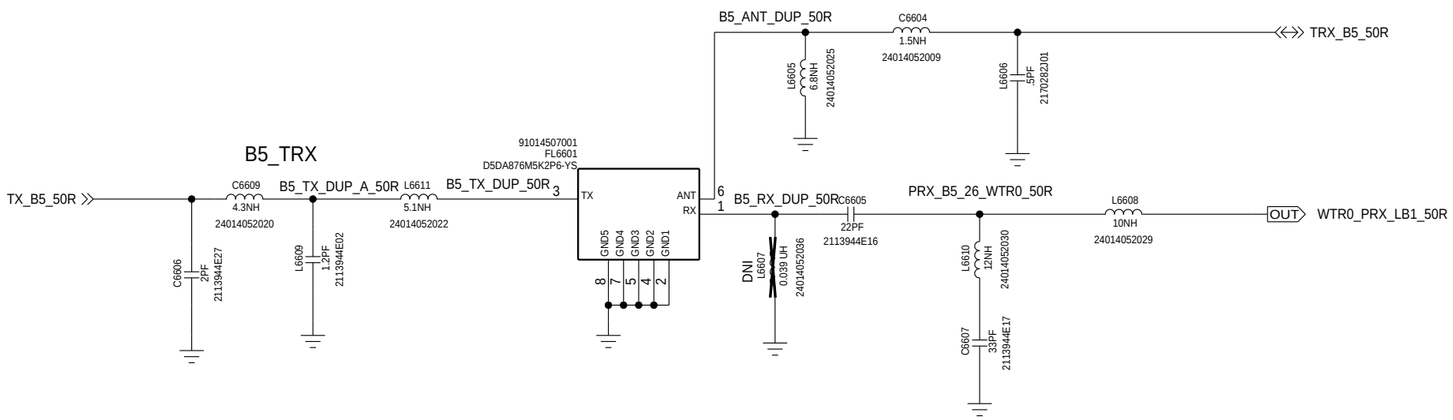

HB_DRX_B7,41
REF 6700-6799

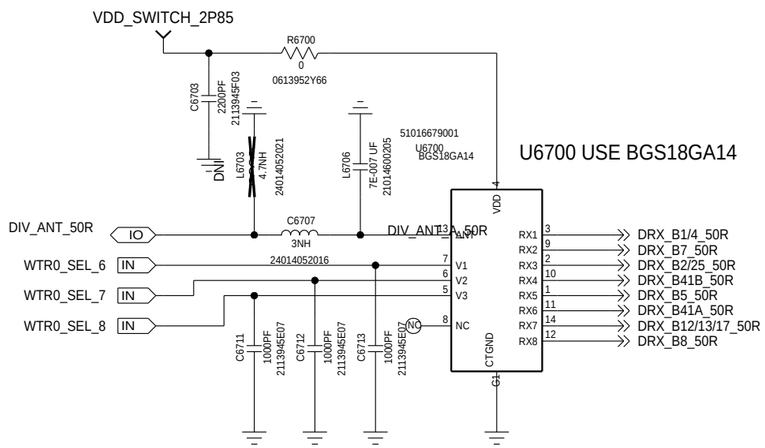

DRX_B41C/B7

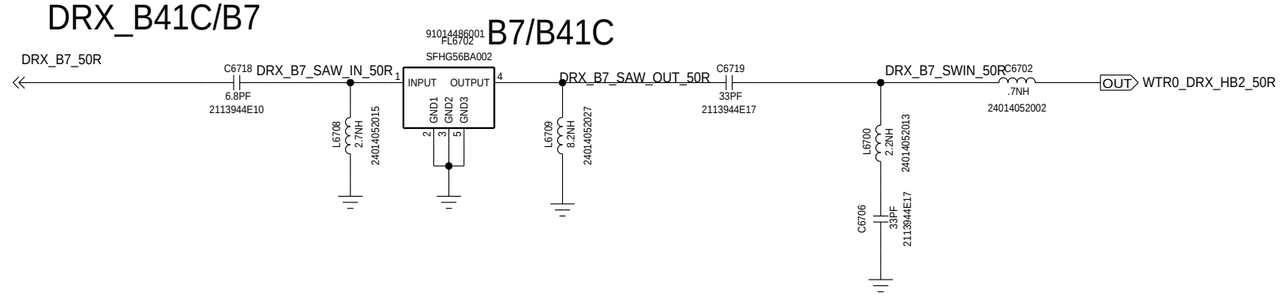

DRX_B41_FULL_BAND

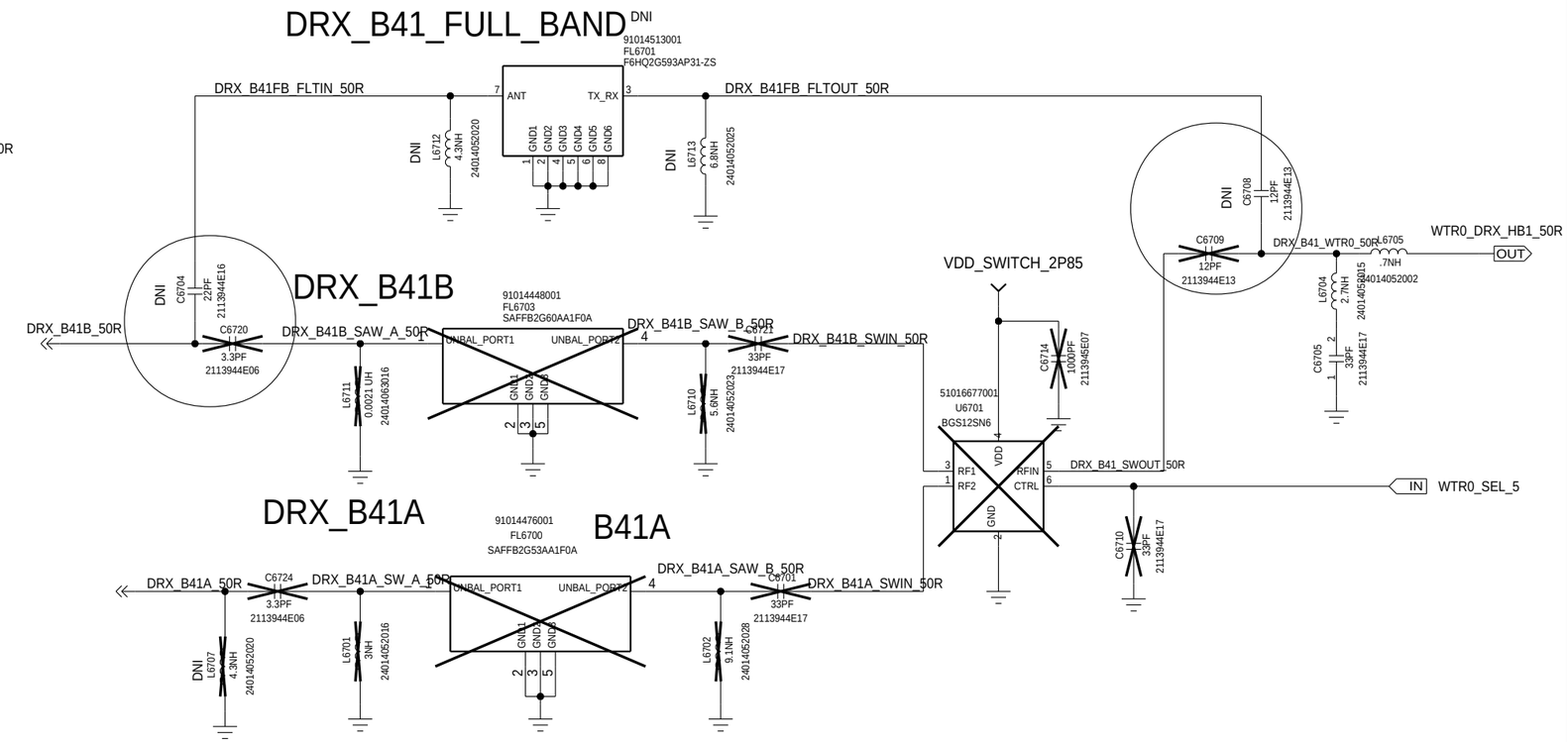

MB_DRX_B1,2,4,25
REF 6800-6899

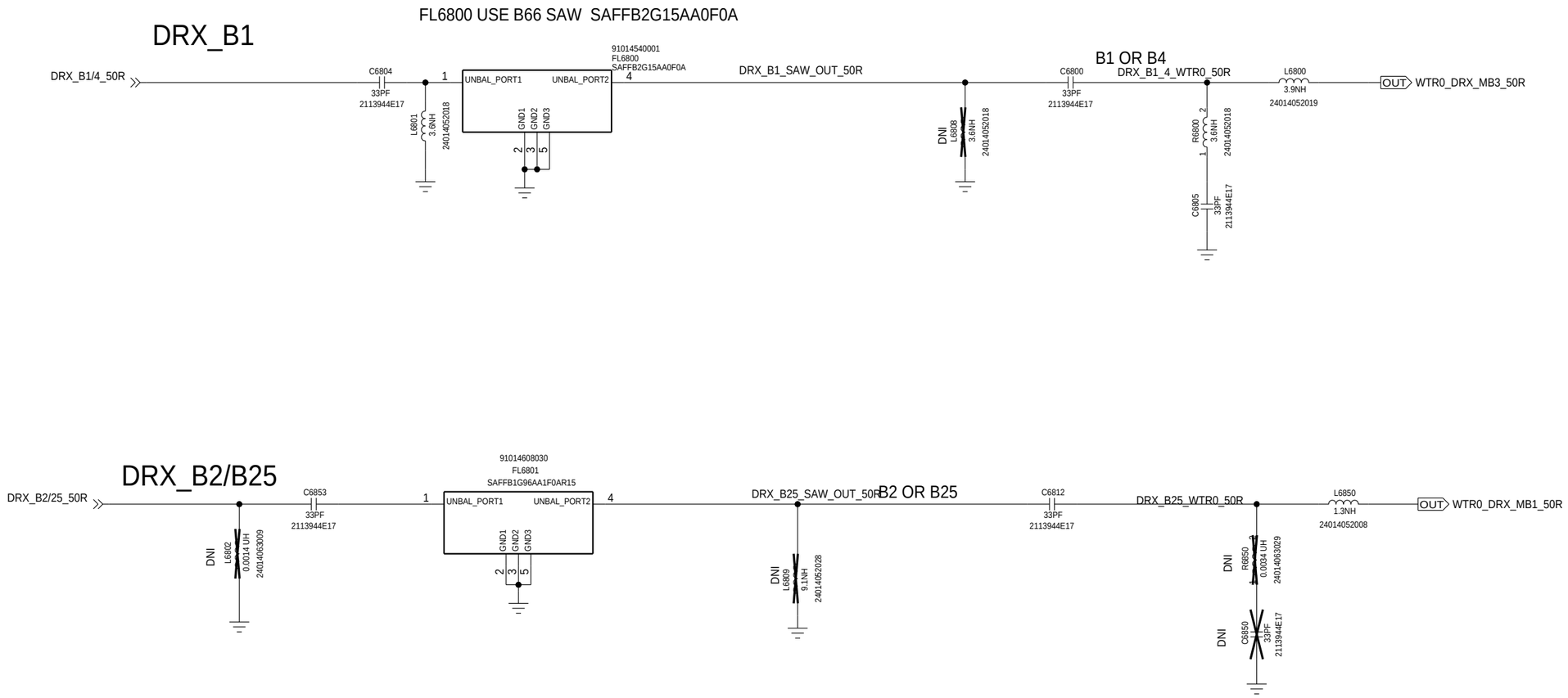

LB_DRX_B5,8,12,13,17,26, REF 6900-6999

LB_DRX
REF:6900-6999

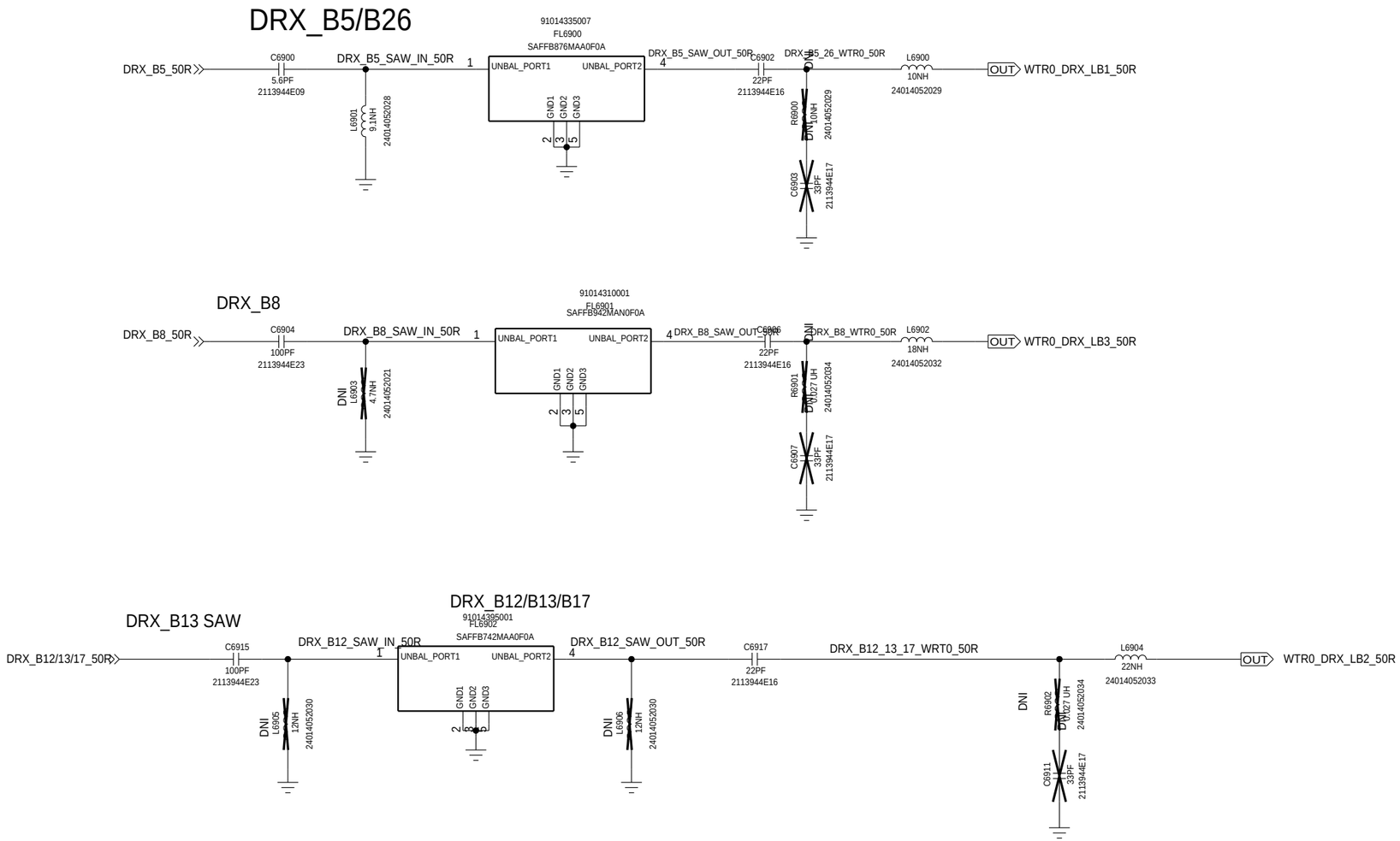

GNSS
REF7000-7009

GNSS

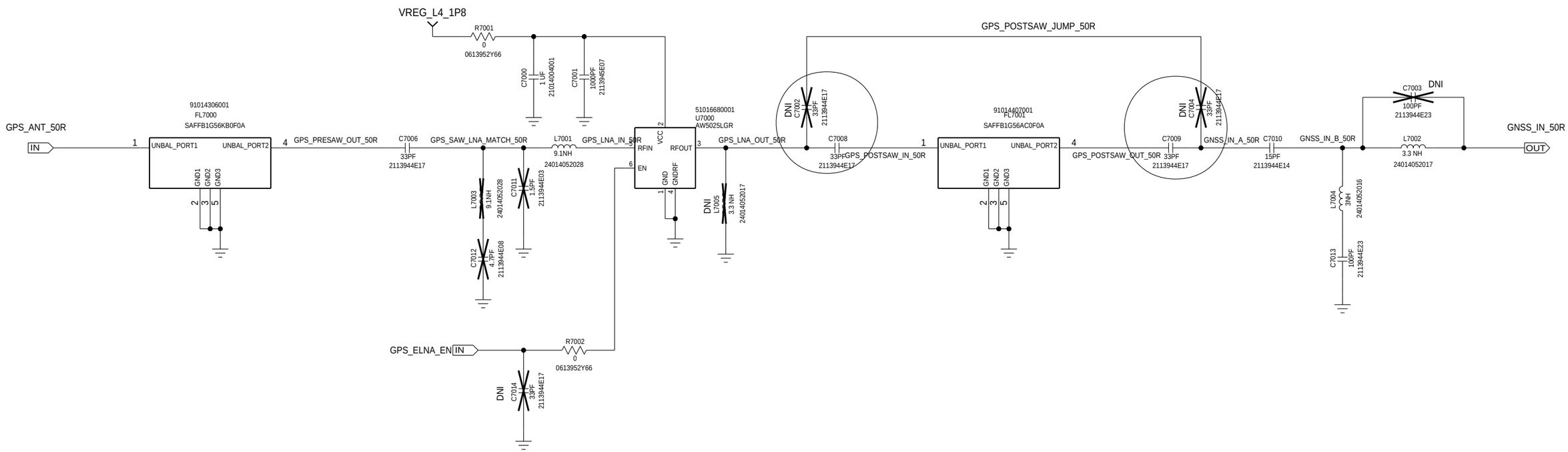

DCDC
REF7100-7109

DCDC

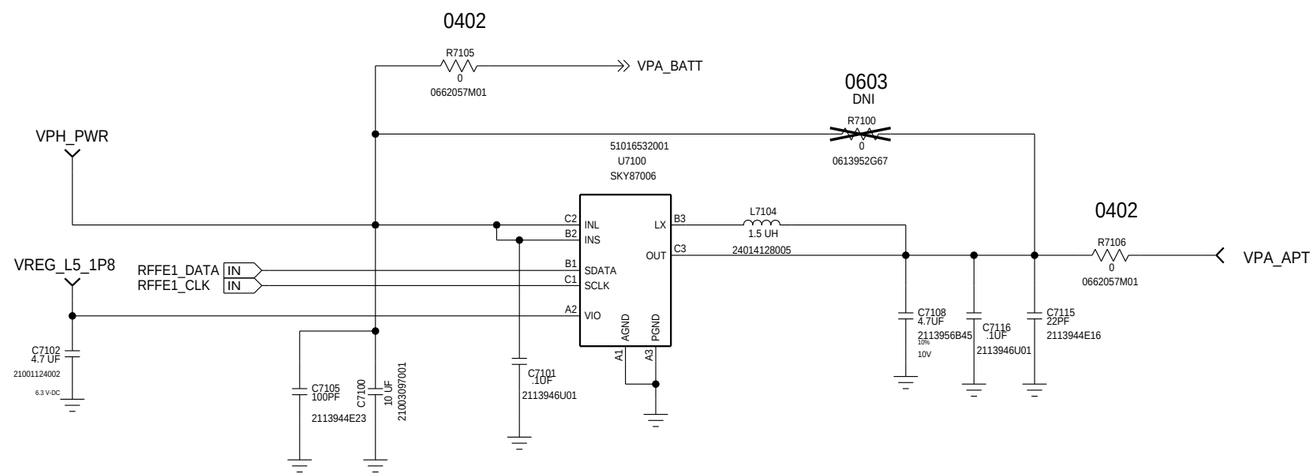

BYPASS OPTION FOR VPA_VBATT
DNP APPROPRIATELY

8000:antennas

REF 8000-8049

ANT MAIN

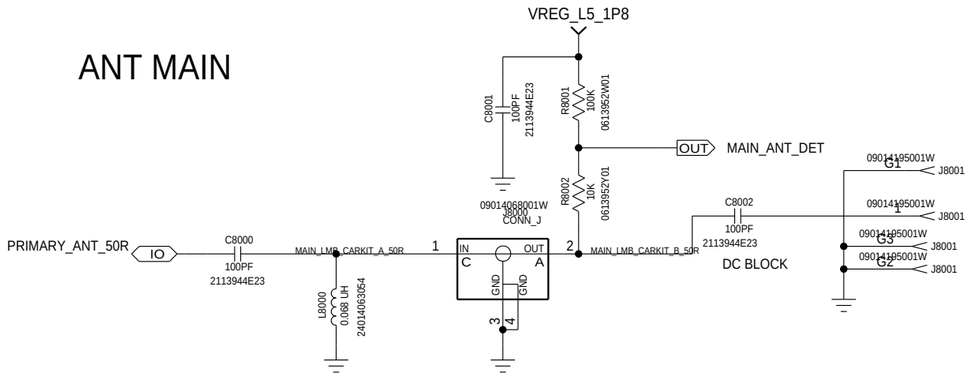

ANT_WIFI 2.4G/GPS

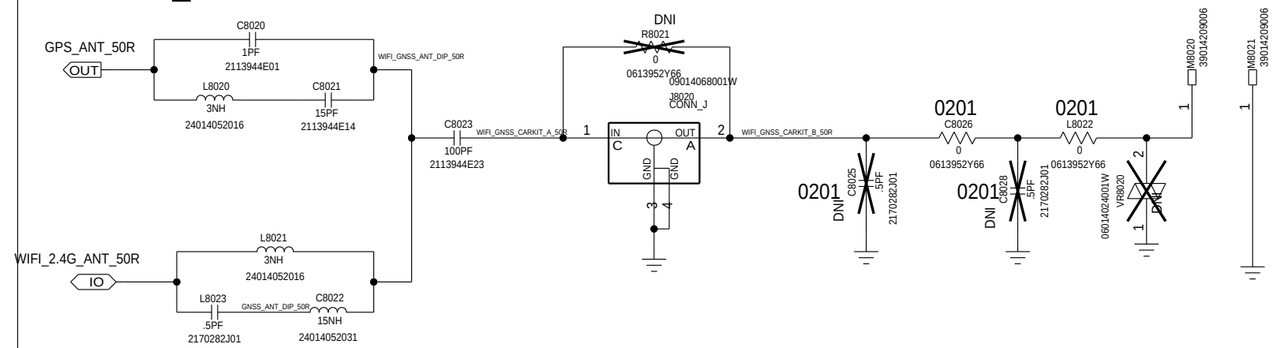

ANT MAIN (HB)

SAR_ANT

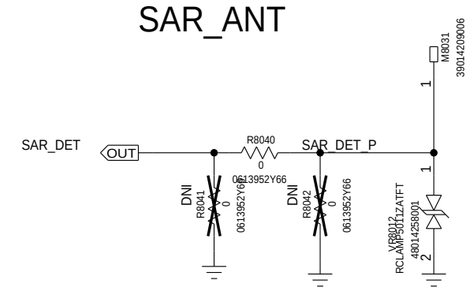

ANT_WIFI_5G

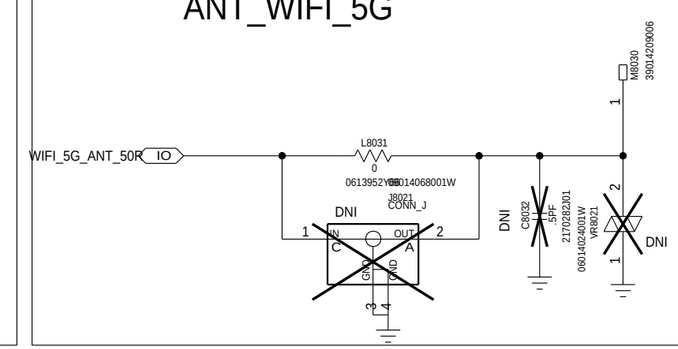

ANT DRX

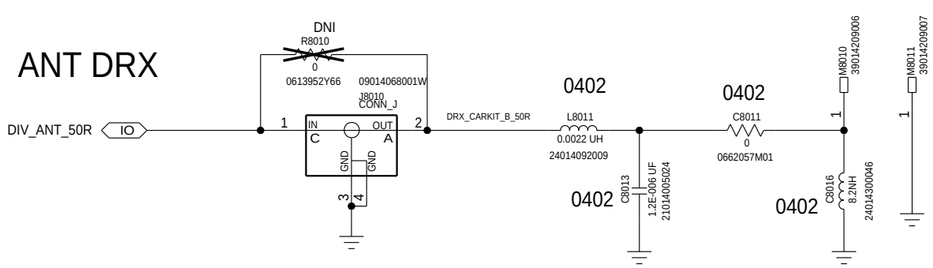

8500:WCN3660B RF

REF 8500-8519

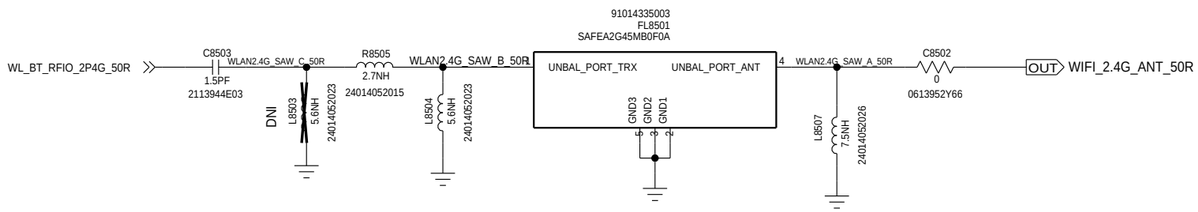

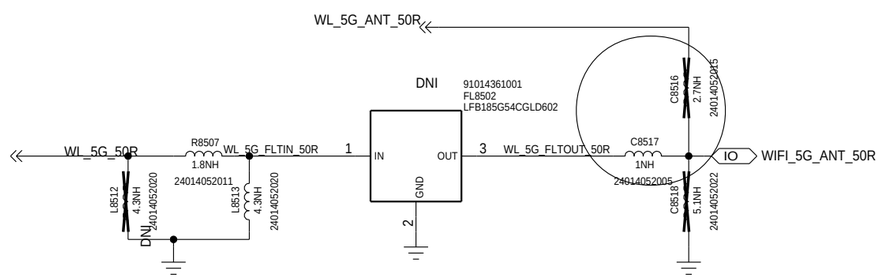

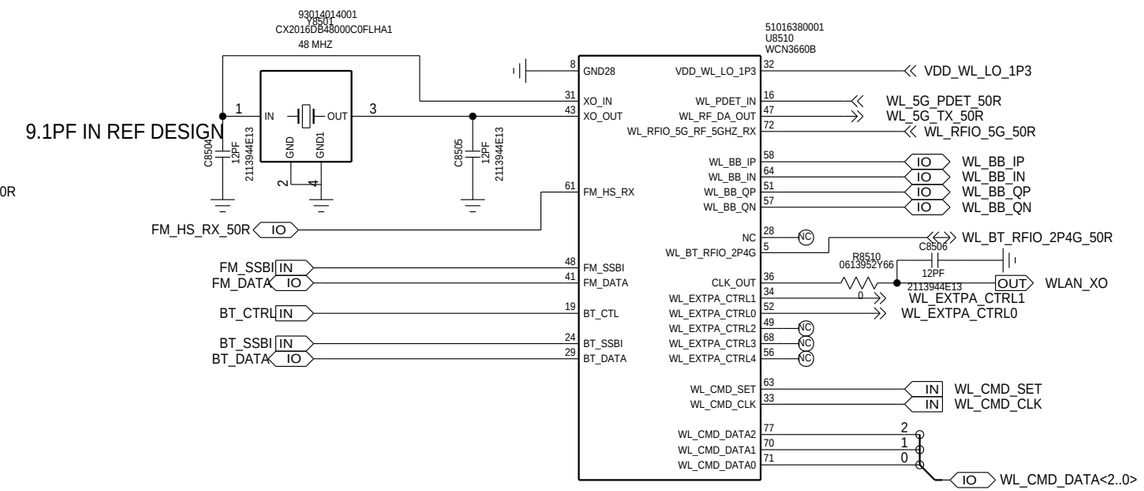

8520:WCN3660B Power

REF 8520-8549

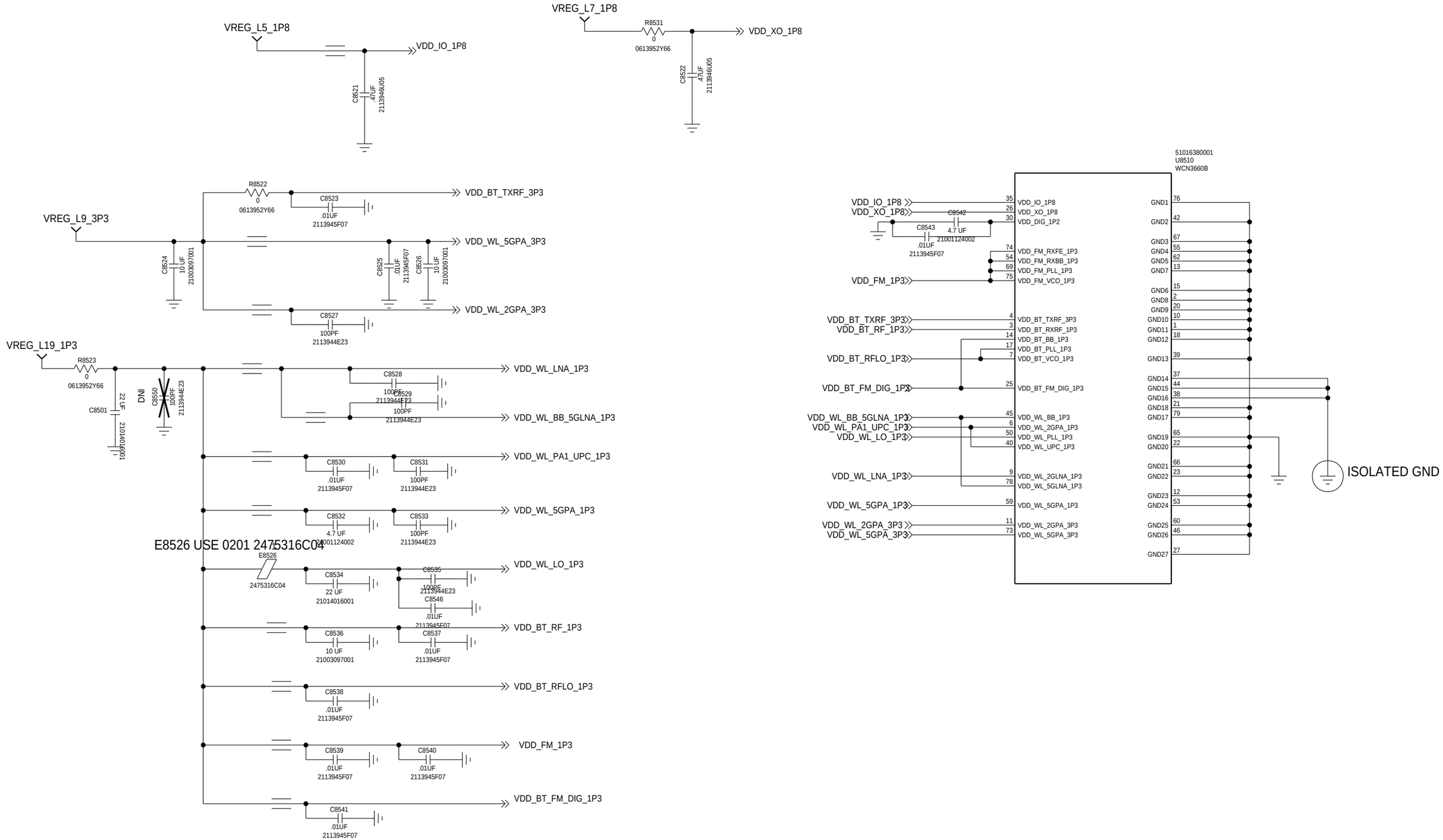

8550:WCN3660B 5G FEM
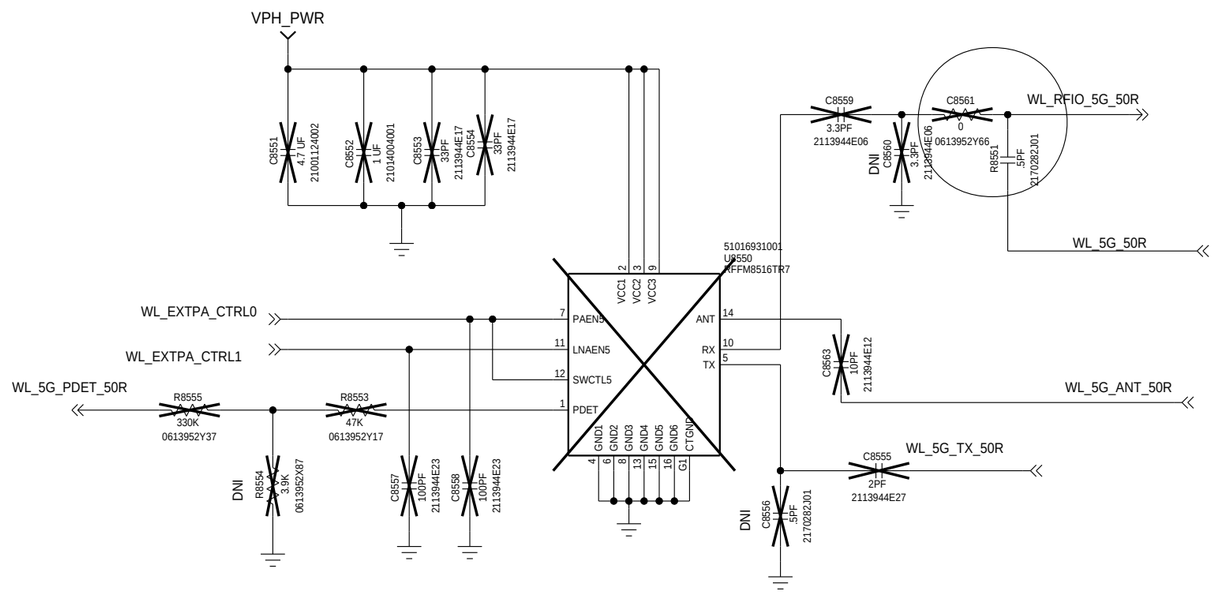
REF 8550-8559