NOT TO BE USED, COPIED, REPRODUCED IN WHOLE OR IN PART, NOR
ITS CONTENTS REVEALED IN ANY MANNER TO OTHERS WITHOUT THE
EXPRESS WRITTEN PERMISSION OF QUALCOMM.
THIS TECHNICAL DATA MAY BE SUBJECT TO U.S. AND INTERNATIONAL
EXPORT, RE-EXPORT OR TRANSFER ("EXPORT") LAWS. DIVERSION
CONTRARY TO U.S. AND INTERNATIONAL LAW IS STRICTLY PROHIBITED

Copyright (C) 2014 QUALCOMM Incorporated
All rights reserved

QUALCOMM Incorporated
5775 Morehouse Drive
San Diego, CA 92121-1714
U.S.A.

Qualcomm Confidential
and Proprietary

Title

<Title>

Size	Sheet	Rev
E	None	<A>

Date: 2017/10/30 Sheet 1 of 38

NOT TO BE USED, COPIED, REPRODUCED IN WHOLE OR IN PART, NOR
ITS CONTENTS REVEALED IN ANY MANNER TO OTHERS WITHOUT THE
EXPRESS WRITTEN PERMISSION OF QUALCOMM.
THIS TECHNICAL DATA MAY BE SUBJECT TO U.S. AND INTERNATIONAL
EXPORT, RE-EXPORT OR TRANSFER ("EXPORT") LAWS. DIVERSION
CONTRARY TO U.S. AND INTERNATIONAL LAW IS STRICTLY PROHIBITED
Copyright (C) 2014 QUALCOMM Incorporated
All rights reserved

QUALCOMM Incorporated
5775 Morehouse Drive
San Diego, CA 92121-1714
U.S.A.

Qualcomm Confidential
and Proprietary

Title

<Title>

Size	Sheet	Rev
E	Name	<A>

Date: 2017/10/30 | Sheet 2 of 38

NOT TO BE USED, COPIED, REPRODUCED IN WHOLE OR IN PART, NOR
ITS CONTENTS REVEALED IN ANY MANNER TO OTHERS WITHOUT THE
EXPRESS WRITTEN PERMISSION OF QUALCOMM.
THIS TECHNICAL DATA MAY BE SUBJECT TO U.S. AND INTERNATIONAL
EXPORT, RE-EXPORT OR TRANSFER ("EXPORT") LAWS. DIVERSION
CONTRARY TO U.S. AND INTERNATIONAL LAW IS STRICTLY PROHIBITED

Copyright (C) 2014 QUALCOMM Incorporated
All rights reserved

QUALCOMM Incorporated
5775 Morehouse Drive
San Diego, CA 92121-1714
U.S.A.

Qualcomm Confidential
and Proprietary

Title
<Title>

Size	Sheet	Rev
E	Name	<A>

Date: 2017/10/30 Sheet 3 of 38

NOT TO BE USED, COPIED, REPRODUCED IN WHOLE OR IN PART, NOR
ITS CONTENTS REVEALED IN ANY MANNER TO OTHERS WITHOUT THE
EXPRESS WRITTEN PERMISSION OF QUALCOMM.
THIS TECHNICAL DATA MAY BE SUBJECT TO U.S. AND INTERNATIONAL
EXPORT, RE-EXPORT OR TRANSFER ("EXPORT") LAWS. DIVERSION
CONTRARY TO U.S. AND INTERNATIONAL LAW IS STRICTLY PROHIBITED

Copyright (C) 2014 QUALCOMM Incorporated
All rights reserved

QUALCOMM Incorporated
5775 Morehouse Drive
San Diego, CA 92121-1714
U.S.A.

Qualcomm Confidential
and Proprietary

Title

<Title>

Size	Sheet	Rev
E	None	<A>

Date: 2017/10/30 Sheet 4 of 38

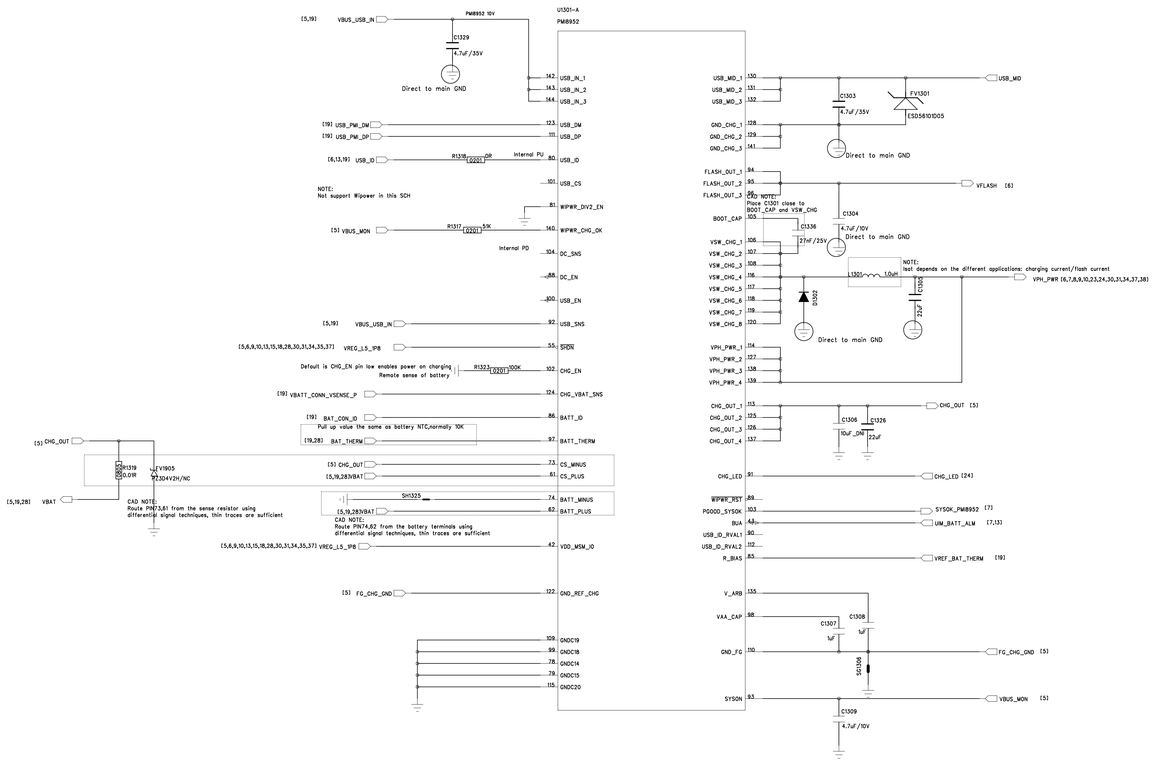

REVISION	
LTR	ECO NO:

DRAWN: <Drawn By>	DATED: <Drawn Date>	COMPANY: <Company Nam	
		TITLE: <Title>	
CHECKED: <Checked By>	DATED: <Checked Date>	CODE: <Code>	SIZE: E
QUALITY CONTROL: <QC By>	DATED: <QC Date>		DRAWING <Drawing N
RELEASED: <Released By>	DATED: <Release Date>	SCALE: <Scale>	

REVISION	
LTR	ECO NO:

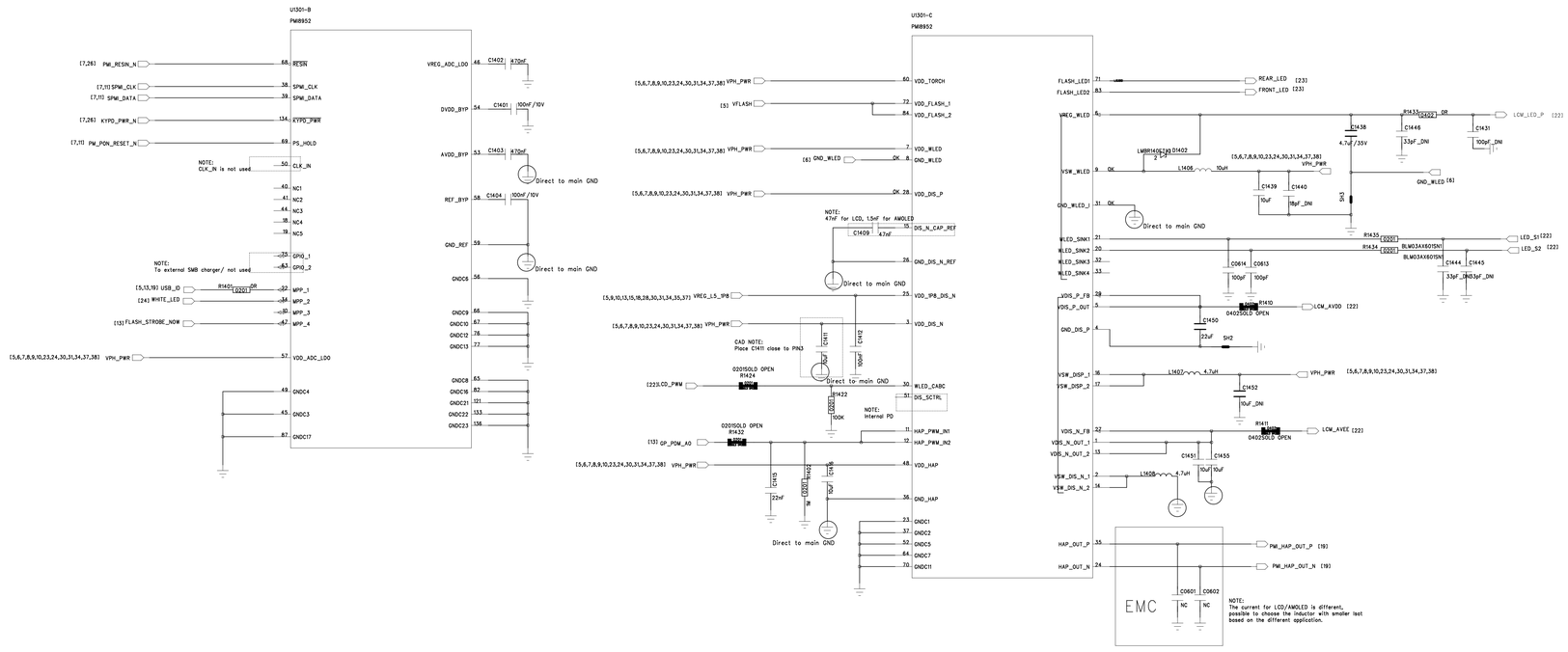

DRAWN: <Drawn By>	DATED: <Drawn Date>	COMPANY: <Company Nam	
CHECKED: <Checked By>	DATED: <Checked Date>	TITLE: <Title>	
QUALITY CONTROL: <QC By>	DATED: <QC Date>	CODE: <Code>	SIZE: E
RELEASED: <Released By>	DATED: <Release Date>	SCALE: <Scale>	DRAWING <Drawing N

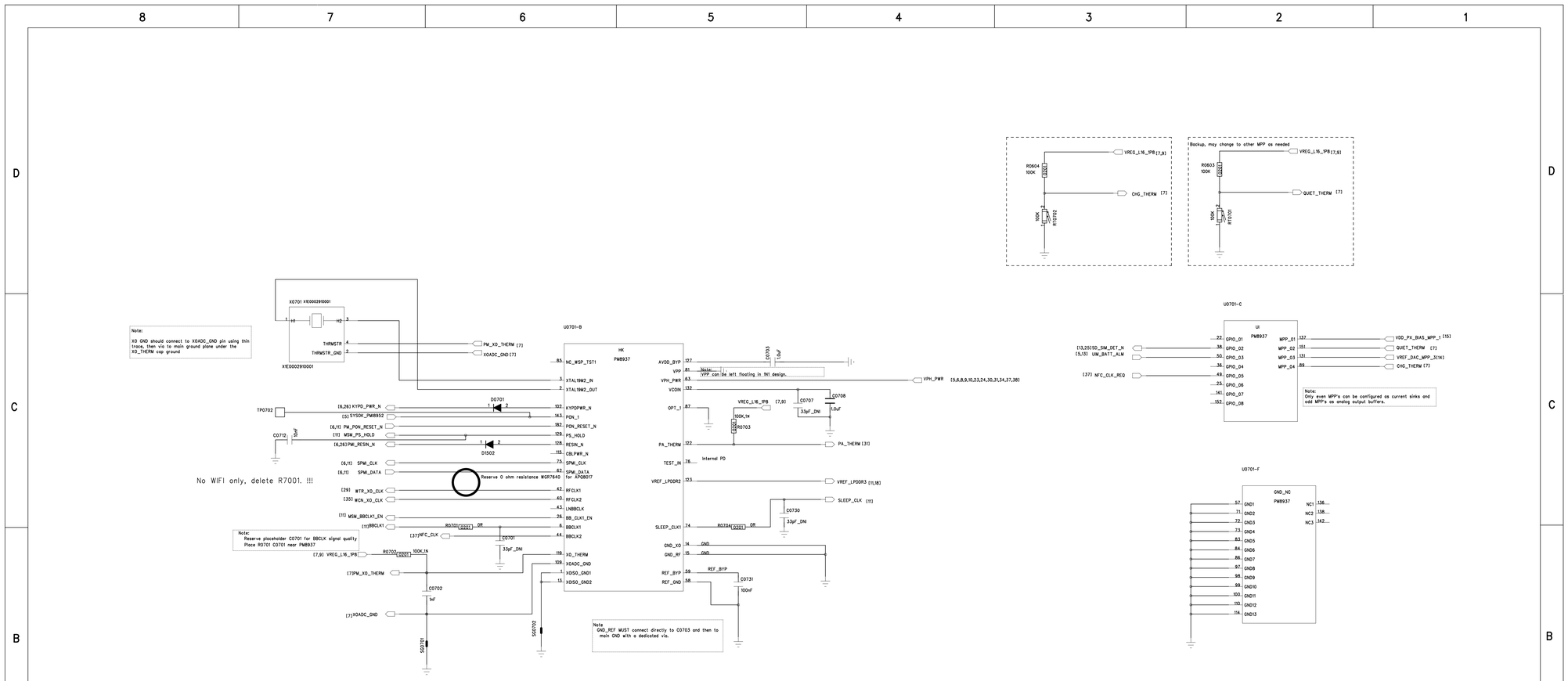

NOT TO BE USED, COPIED, REPRODUCED IN WHOLE OR IN PART, NOR ITS CONTENTS REVEALED IN ANY MANNER TO OTHERS WITHOUT THE EXPRESS WRITTEN PERMISSON OF QUALCOMM.
THIS TECHNICAL DATA MAY BE SUBJECT TO U.S. AND INTERNATIONAL EXPORT, RE-EXPORT OR TRANSFER ("EXPORT") LAWS. DIVERSION CONTRARY TO U.S. AND INTERNATIONAL LAW IS STRICTLY PROHIBITED

Copyright (C) 2014 QUALCOMM Incorporated
All rights reserved

QUALCOMM Incorporated
5775 Morehouse Drive
San Diego, CA 92121-1714
U.S.A.

Qualcomm Confidential and Proprietary

Title
<Title>

Size	Sheet	Rev
E	Name	<A>

Date: 2017/10/10 Sheet 7 of 38

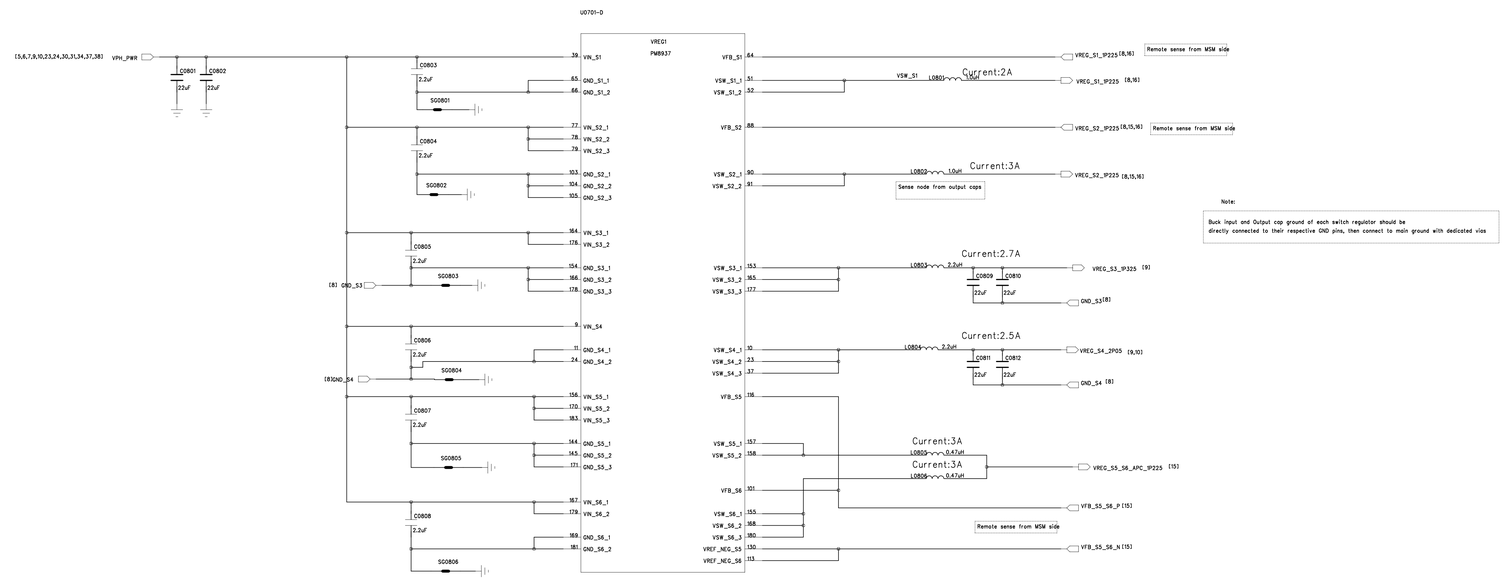

Note:

Buck input and Output cap ground of each switch regulator should be directly connected to their respective GND pins, then connect to main ground with dedicated vias

NOT TO BE USED, COPIED, REPRODUCED IN WHOLE OR IN PART, NOR ITS CONTENTS REVEALED IN ANY MANNER TO OTHERS WITHOUT THE EXPRESS WRITTEN PERMISSION OF QUALCOMM.
THIS TECHNICAL DATA MAY BE SUBJECT TO U.S. AND INTERNATIONAL EXPORT, RE-EXPORT OR TRANSFER ("EXPORT") LAWS. DIVERSION CONTRARY TO U.S. AND INTERNATIONAL LAW IS STRICTLY PROHIBITED.
Copyright (C) 2014 QUALCOMM Incorporated
All rights reserved

QUALCOMM Incorporated
5775 Morehouse Drive
San Diego, CA 92121-1714
U.S.A.

Qualcomm Confidential and Proprietary

Title
<Title>

Size	Sheet	Rev
E	Name	<A>

Date: 2017/10/30 Sheet 8 of 38

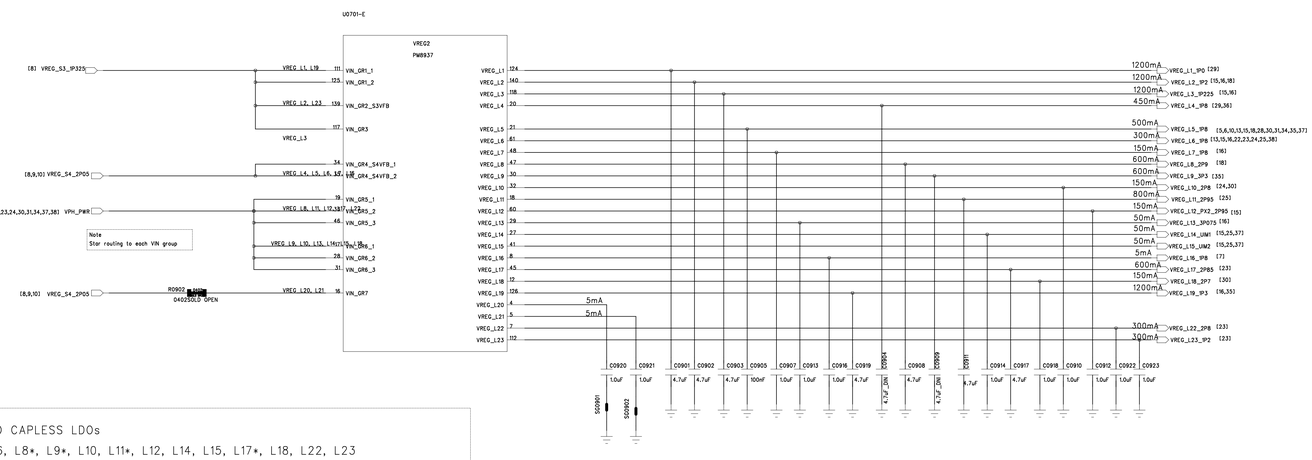

PSEUDO CAPLESS LDOs

L4*, L6, L8*, L9*, L10, L11*, L12, L14, L15, L17*, L18, L22, L23

L4*, L8*, L9*, L11*, L17*, still need validation as Pseudo-capless

L5, L7, L13, L16 have internal PMIC Loads and require local CAPs.

NOT TO BE USED, COPIED, REPRODUCED IN WHOLE OR IN PART, NOR ITS CONTENTS REVEALED IN ANY MANNER TO OTHERS WITHOUT THE EXPRESS WRITTEN PERMISSION OF QUALCOMM.
THIS TECHNICAL DATA MAY BE SUBJECT TO U.S. AND INTERNATIONAL EXPORT, RE-EXPORT OR TRANSFER ("EXPORT") LAWS. DIVERSION CONTRARY TO U.S. AND INTERNATIONAL LAW IS STRICTLY PROHIBITED
Copyright (C) 2014 QUALCOMM Incorporated
All rights reserved

QUALCOMM Incorporated
5775 Morehouse Drive
San Diego, CA 92121-1714
U.S.A.

Qualcomm Confidential and Proprietary

Title
<Title>

Size E | Sheet Name | Rev <A>

Date: 2017/10/30 | Sheet 9 of 38

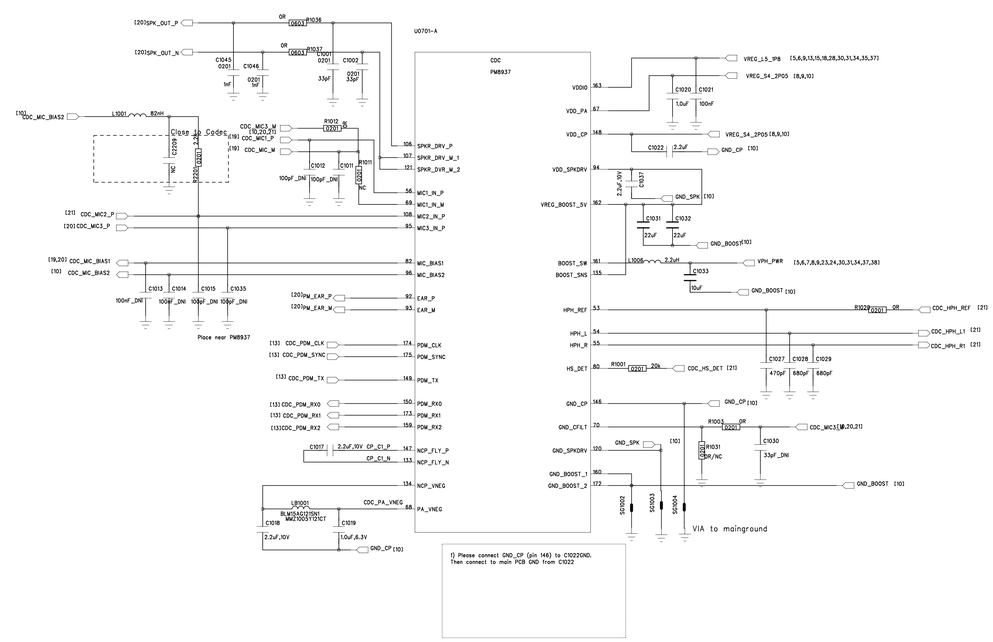

NOT TO BE USED, COPIED, REPRODUCED IN WHOLE OR IN PART, NOR ITS CONTENTS REVEALED IN ANY MANNER TO OTHERS WITHOUT THE EXPRESS WRITTEN PERMISSION OF QUALCOMM.
THIS TECHNICAL DATA MAY BE SUBJECT TO U.S. AND INTERNATIONAL EXPORT, RE-EXPORT OR TRANSFER ("EXPORT") LAWS. DIVERSION CONTRARY TO U.S. AND INTERNATIONAL LAW IS STRICTLY PROHIBITED
Copyright (C) 2014 QUALCOMM Incorporated
All rights reserved

QUALCOMM Incorporated
5775 Morehouse Drive
San Diego, CA 92121-1714
U.S.A.
Qualcomm Confidential and Proprietary

Title
<title>

Size	Sheet	Rev
E	Name	<A>

Date: 2017/10/30 Sheet 10 of 38

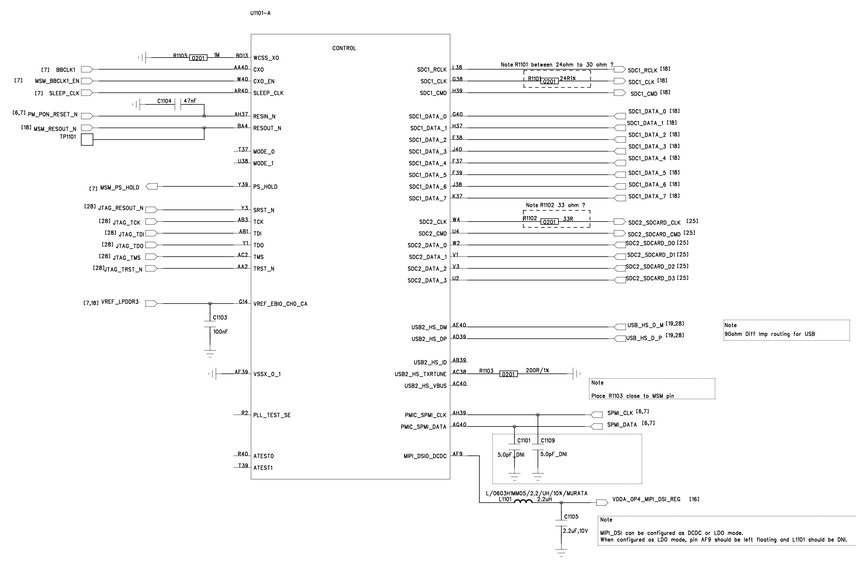

NOT TO BE USED, COPIED, REPRODUCED IN WHOLE OR IN PART, NOR ITS CONTENTS REVEALED IN ANY MANNER TO OTHERS WITHOUT THE EXPRESS WRITTEN PERMISSION OF QUALCOMM.
THIS TECHNICAL DATA MAY BE SUBJECT TO U.S. AND INTERNATIONAL EXPORT, RE-EXPORT OR TRANSFER ("EXPORT") LAWS. DIVERSION CONTRARY TO U.S. AND INTERNATIONAL LAW IS STRICTLY PROHIBITED
Copyright (C) 2014 QUALCOMM Incorporated
All rights reserved

QUALCOMM Incorporated
5775 Morehouse Drive
San Diego, CA 92121-1714
U.S.A.

Qualcomm Confidential and Proprietary

Title
<Title>

Size	Sheet	Rev
E	Name	<A>

Date: 2017/10/30 Sheet 11 of 38

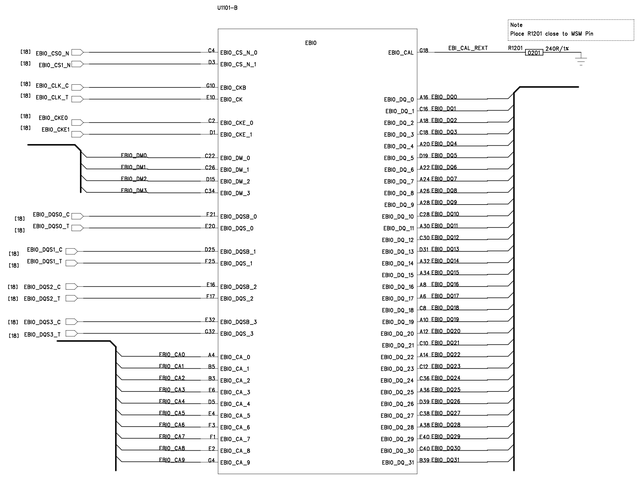

Note
Place R1201 close to MSM Pin

NOT TO BE USED, COPIED, REPRODUCED IN WHOLE OR IN PART, NOR
ITS CONTENTS REVEALED IN ANY MANNER TO OTHERS WITHOUT THE
EXPRESS WRITTEN PERMISSION OF QUALCOMM.
THIS TECHNICAL DATA MAY BE SUBJECT TO U.S. AND INTERNATIONAL
EXPORT, RE-EXPORT OR TRANSFER ("EXPORT") LAWS. DIVERSION
CONTRARY TO U.S. AND INTERNATIONAL LAW IS STRICTLY PROHIBITED
Copyright (C) 2014 QUALCOMM Incorporated
All rights reserved

QUALCOMM Incorporated
5775 Morehouse Drive
San Diego, CA 92121-1714
U.S.A.
Qualcomm Confidential
and Proprietary

Title
<Title>

Size	Sheet Name	Rev
E		<A>

Date: 2017/10/30 Sheet 12 of 38

Note: Asterisks (*) indicate modem power management (MPM) wake-up pins

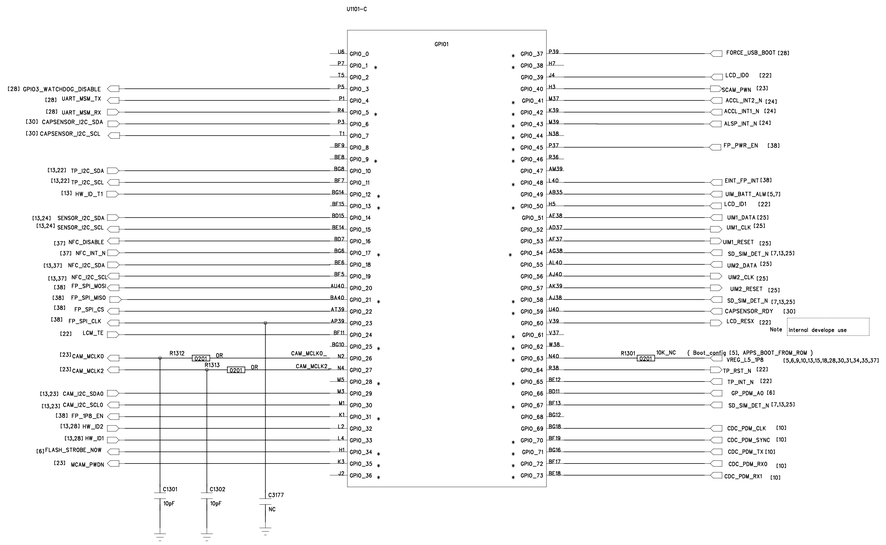

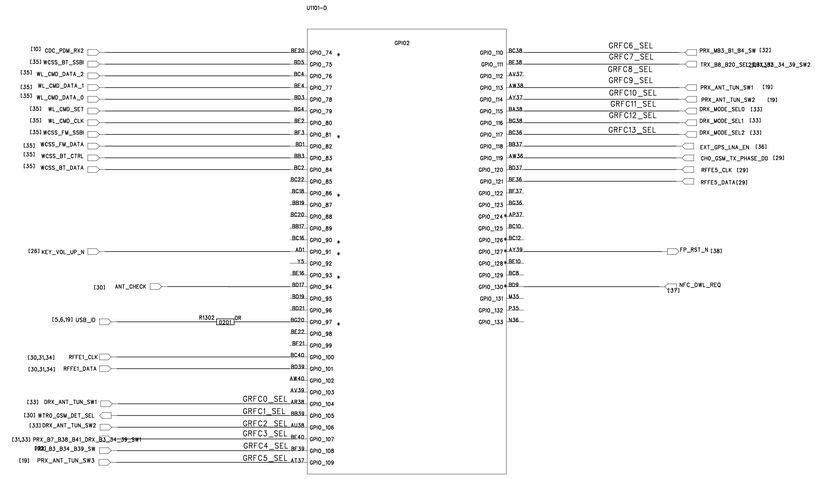

Note: Do not have pull-ups on the following GPIOs unless intend for boot or secure- boot related configurations:
GPIO_91, 107, 109

GPIO	BOOT_CONFIG
GPIO_3	BOOT_CONFIG(0)/WDOG_DISABLE
GPIO_111	BOOT_CONFIG(1)
GPIO_112	BOOT_CONFIG(2)
GPIO_88	BOOT_CONFIG(3)

BOOT_CONFIG(3:1)	BOOT_CONFIG
0b000	SDC1 -> SDC2 -> USB2.0
0b010	SDC1
0b100	SDC2-> SDC1

Default Boot Config (0b000) is SDC1(eMMC)

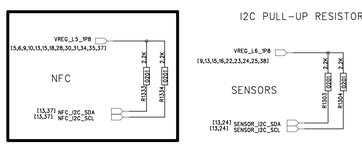

I2C PULL-UP RESISTORS

Note: Ensure SW sets these GPIOs (Sensor, CTP and Camera I2C bus) to inout pull down when the peripherals are powered off to eliminate leakage.

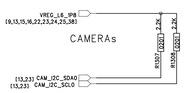

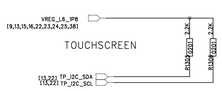

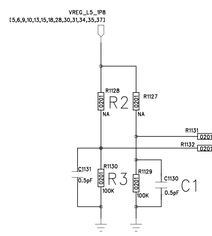

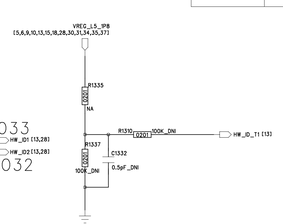

number of Board ID not enough !!!

NOT TO BE USED, COPIED, REPRODUCED IN WHOLE OR IN PART, NOR ITS CONTENTS REVEALED IN ANY MANNER TO OTHERS WITHOUT THE EXPRESS WRITTEN PERMISSION OF QUALCOMM.
THIS TECHNICAL DATA MAY BE SUBJECT TO U.S. AND INTERNATIONAL EXPORT, RE-EXPORT OR TRANSFER ("EXPORT") LAWS. DIVERSION CONTRARY TO U.S. AND INTERNATIONAL LAW IS STRICTLY PROHIBITED

Copyright (C) 2014 QUALCOMM Incorporated
All rights reserved

QUALCOMM Incorporated
5775 Morehouse Drive
San Diego, CA 92121-1714
U.S.A.

Qualcomm Confidential and Proprietary

Title
<Title>

Size	Sheet	Rev
E	None	<X.>

Date: 2017/10/10 Sheet 13 of 38

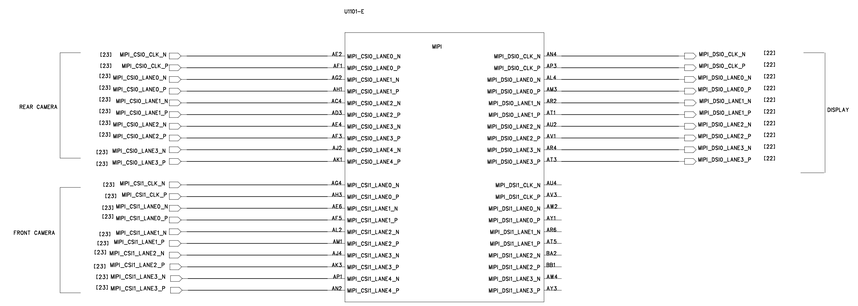

Note: If best EMI practices are followed for MIPI CSI/DSI signals, there is no need for common mode choke filters. You may choose to have placeholders for common mode depending upon your design constraints.
Extreme care must be taken that no stubs are created by doing so.

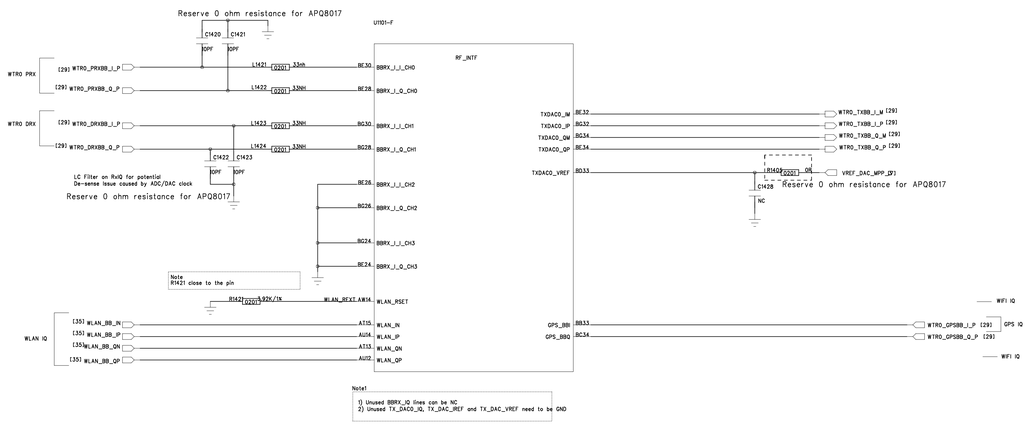

NOT TO BE USED, COPIED, REPRODUCED IN WHOLE OR IN PART, NOR ITS CONTENTS REVEALED IN ANY MANNER TO OTHERS WITHOUT THE EXPRESS WRITTEN PERMISSION OF QUALCOMM.
THIS TECHNICAL DATA MAY BE SUBJECT TO U.S. AND INTERNATIONAL EXPORT, RE-EXPORT OR TRANSFER ("EXPORT") LAWS. DIVERSION CONTRARY TO U.S. AND INTERNATIONAL LAW IS STRICTLY PROHIBITED
Copyright (C) 2014 QUALCOMM Incorporated
All rights reserved

QUALCOMM Incorporated
5775 Morehouse Drive
San Diego, CA 92121-1714
U.S.A.
Qualcomm Confidential
and Proprietary

Title
<Title>

Size	Sheet Name	Rev
E		<A>

Date: 2017/10/30 Sheet 14 of 38

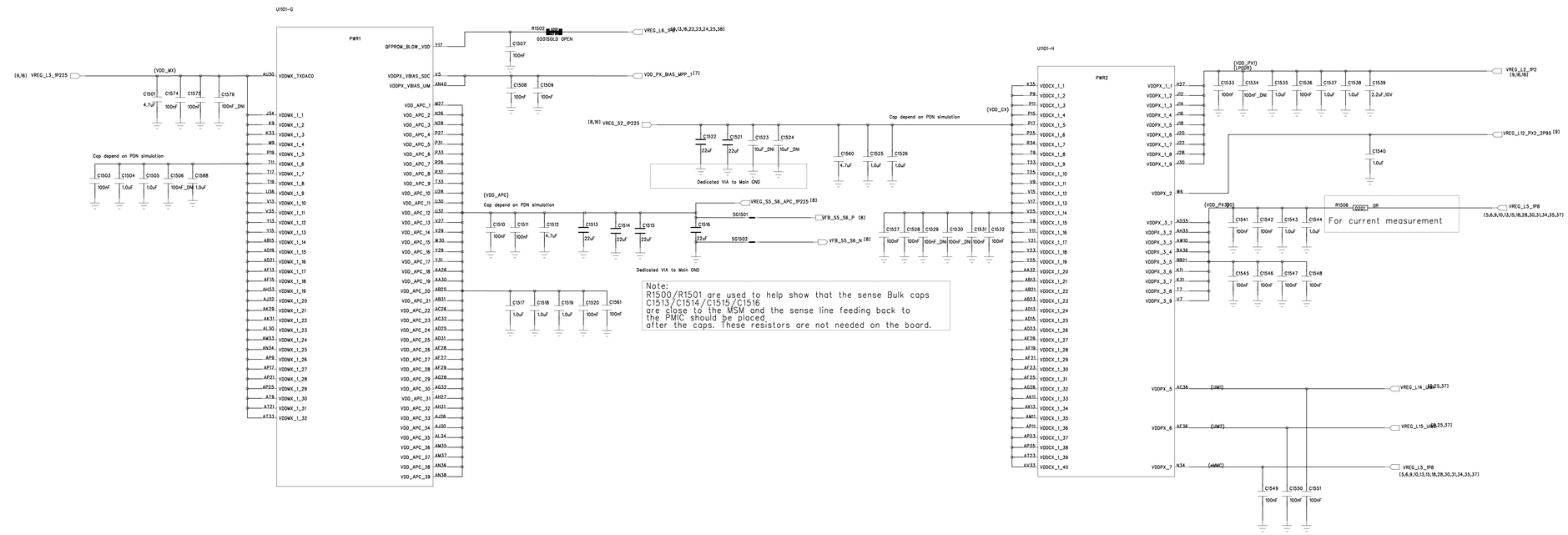

NOT TO BE USED, COPIED, REPRODUCED IN WHOLE OR IN PART, NOR ITS CONTENTS REVEALED IN ANY MANNER TO OTHERS WITHOUT THE EXPRESS WRITTEN PERMISSION OF QUALCOMM.
THIS TECHNICAL DATA MAY BE SUBJECT TO U.S. AND INTERNATIONAL EXPORT, RE-EXPORT OR TRANSFER ("EXPORT") LAWS. DIVERSION CONTRARY TO U.S. AND INTERNATIONAL LAW IS STRICTLY PROHIBITED.
Copyright (C) 2014 QUALCOMM Incorporated
All rights reserved

QUALCOMM Incorporated
5775 Morehouse Drive
San Diego, CA 92121-1714
U.S.A.
Qualcomm Confidential and Proprietary

Title
<Title>

Size: E | Sheet: Name | Rev: <A>
Date: 2012/10/10 | Sheet 15 of 38

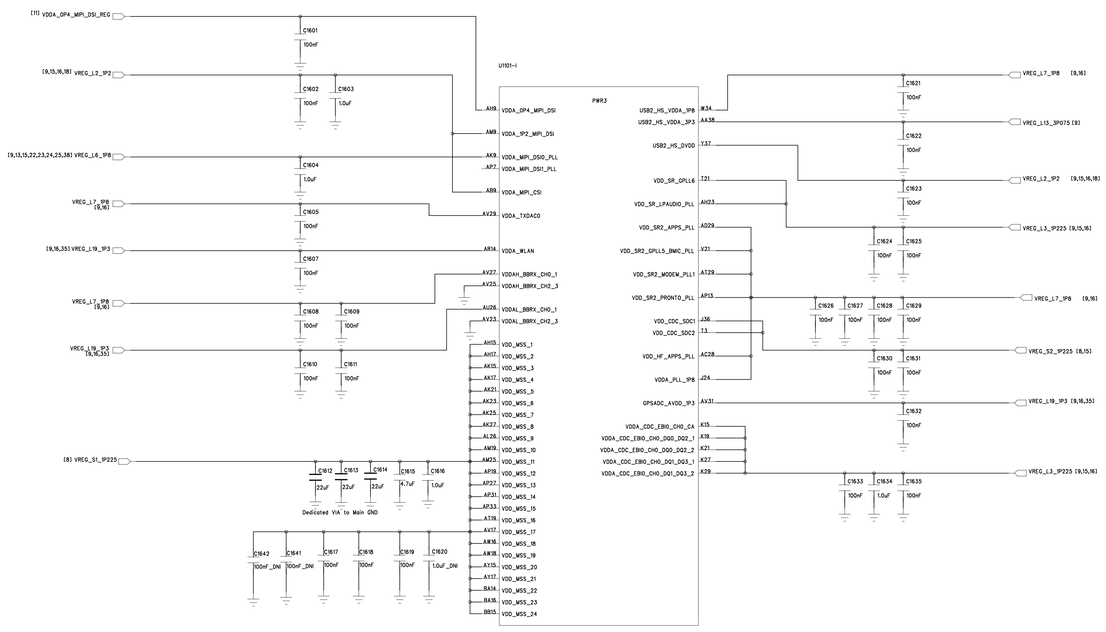

NOT TO BE USED, COPIED, REPRODUCED IN WHOLE OR IN PART, NOR ITS CONTENTS REVEALED IN ANY MANNER TO OTHERS WITHOUT THE EXPRESS WRITTEN PERMISSION OF QUALCOMM.
THIS TECHNICAL DATA MAY BE SUBJECT TO U.S. AND INTERNATIONAL EXPORT, RE-EXPORT OR TRANSFER ("EXPORT") LAWS. DIVERSION CONTRARY TO U.S. AND INTERNATIONAL LAW IS STRICTLY PROHIBITED
Copyright (C) 2014 QUALCOMM Incorporated
All rights reserved

QUALCOMM Incorporated
5775 Morehouse Drive
San Diego, CA 92121-1714
U.S.A.

Qualcomm Confidential and Proprietary

Title
<Title>

Size	Sheet	Rev
E	None	<A>

Date: 2017/10/10 Sheet 16 of 38

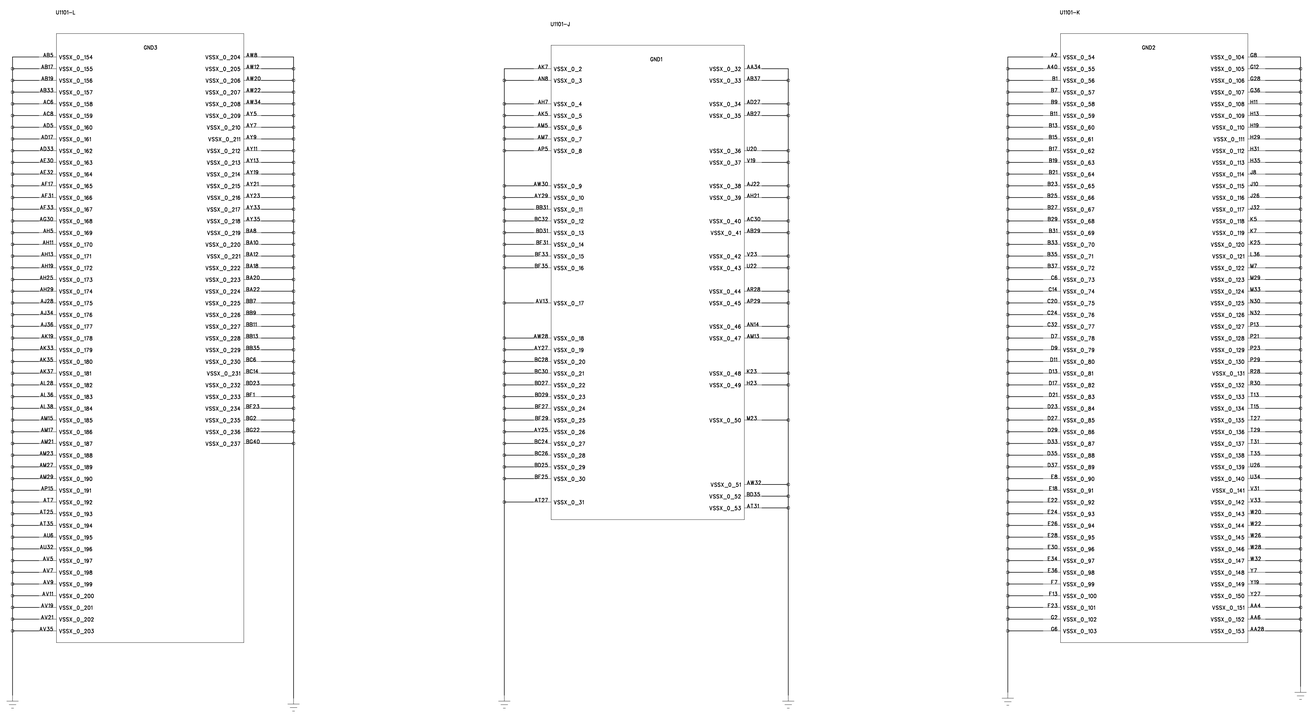

NOT TO BE USED, COPIED, REPRODUCED IN WHOLE OR IN PART, NOR ITS CONTENTS REVEALED IN ANY MANNER TO OTHERS WITHOUT THE EXPRESS WRITTEN PERMISSION OF QUALCOMM.
THIS TECHNICAL DATA MAY BE SUBJECT TO U.S. AND INTERNATIONAL EXPORT, RE-EXPORT OR TRANSFER ("EXPORT") LAWS. DIVERSION CONTRARY TO U.S. AND INTERNATIONAL LAW IS STRICTLY PROHIBITED
Copyright (C) 2014 QUALCOMM Incorporated
All rights reserved

QUALCOMM Incorporated
5775 Morehouse Drive
San Diego, CA 92121-1714
U.S.A.

Qualcomm Confidential and Proprietary

Title
<Title>

Size	Sheet	Rev
C	Name	<A>

Date: 2017/10/30 Sheet 17 of 38

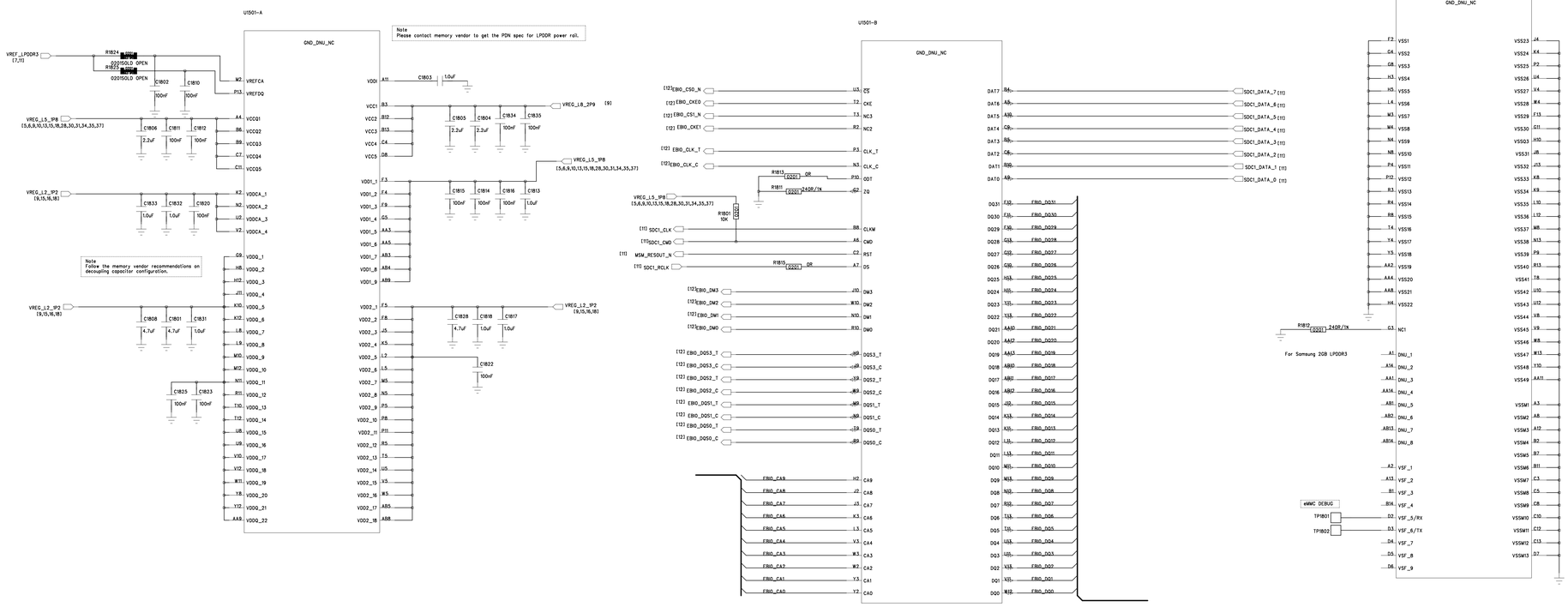

NOT TO BE USED, COPIED, REPRODUCED IN WHOLE OR IN PART, NOR ITS CONTENTS REVEALED IN ANY MANNER TO OTHERS WITHOUT THE EXPRESS WRITTEN PERMISSION OF QUALCOMM.
THIS TECHNICAL DATA MAY BE SUBJECT TO U.S. AND INTERNATIONAL EXPORT, RE-EXPORT OR TRANSFER ("EXPORT") LAWS. DIVERSION CONTRARY TO U.S. AND INTERNATIONAL LAW IS STRICTLY PROHIBITED.
Copyright (C) 2014 QUALCOMM Incorporated
All rights reserved

QUALCOMM Incorporated
5775 Morehouse Drive
San Diego, CA 92121-1714
U.S.A.
Qualcomm Confidential and Proprietary

Title
<Title>

Size	Sheet	Rev
E	None	<X>

Date: 2017/10/30 | Sheet 18 of 38

BAT CON

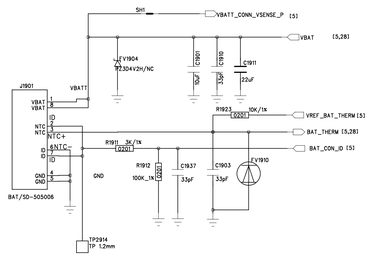

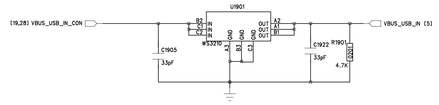

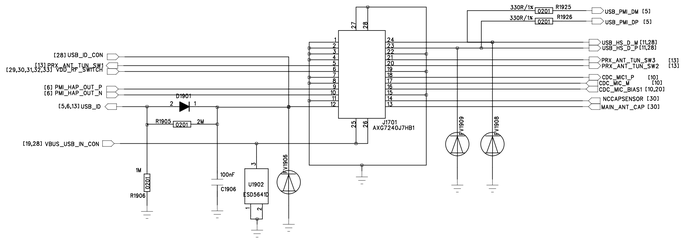

NOT TO BE USED, COPIED, REPRODUCED IN WHOLE OR IN PART, NOR ITS CONTENTS REVEALED IN ANY MANNER TO OTHERS WITHOUT THE EXPRESS WRITTEN PERMISSION OF QUALCOMM.
THIS TECHNICAL DATA MAY BE SUBJECT TO U.S. AND INTERNATIONAL EXPORT, RE-EXPORT OR TRANSFER ("EXPORT") LAWS. DIVERSION CONTRARY TO U.S. AND INTERNATIONAL LAW IS STRICTLY PROHIBITED
Copyright (C) 2014 QUALCOMM Incorporated
All rights reserved

QUALCOMM Incorporated
5775 Morehouse Drive
San Diego, CA 92121-1714
U.S.A.

Qualcomm Confidential and Proprietary

Title
<Title>

Size	Sheet	Rev
E	Name	<A>

Date: 2017/10/30 Sheet 19 of 38

MainMIC

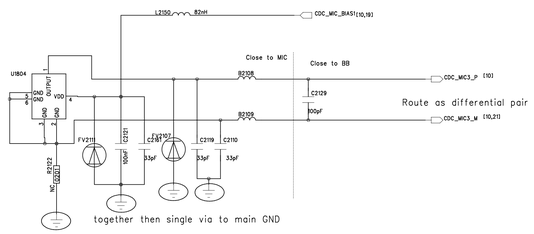

RCV

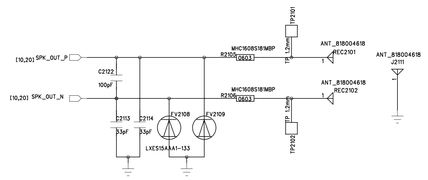

Audio SW

NOT TO BE USED, COPIED, REPRODUCED IN WHOLE OR IN PART, NOR ITS CONTENTS REVEALED IN ANY MANNER TO OTHERS WITHOUT THE EXPRESS WRITTEN PERMISSION OF QUALCOMM.
THIS TECHNICAL DATA MAY BE SUBJECT TO U.S. AND INTERNATIONAL EXPORT, RE-EXPORT OR TRANSFER ("EXPORT") LAWS. DIVERSION CONTRARY TO U.S. AND INTERNATIONAL LAW IS STRICTLY PROHIBITED
Copyright (C) 2014 QUALCOMM Incorporated
All rights reserved

QUALCOMM Incorporated
5775 Morehouse Drive
San Diego, CA 92121-1714
U.S.A.
Qualcomm Confidential and Proprietary

Title
<Title>

Size	Sheet	Rev
E	None	<X>

Date: 2017/10/30 Sheet 20 of 38

PRIMARY MIC

Earphone Audio

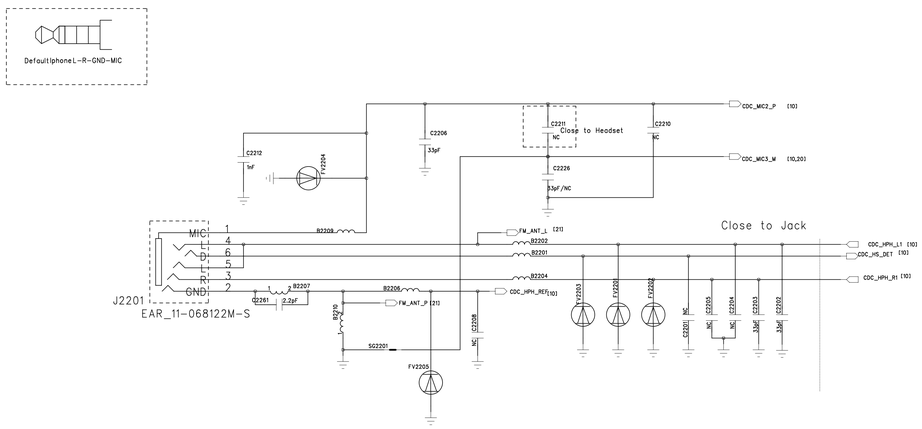

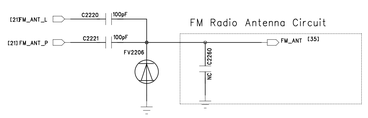

NOT TO BE USED, COPIED, REPRODUCED IN WHOLE OR IN PART, NOR ITS CONTENTS REVEALED IN ANY MANNER TO OTHERS WITHOUT THE EXPRESS WRITTEN PERMISSION OF QUALCOMM.
THIS TECHNICAL DATA MAY BE SUBJECT TO U.S. AND INTERNATIONAL EXPORT, RE-EXPORT OR TRANSFER ("EXPORT") LAWS. DIVERSION CONTRARY TO U.S. AND INTERNATIONAL LAW IS STRICTLY PROHIBITED

Copyright (C) 2014 QUALCOMM Incorporated
All rights reserved

QUALCOMM Incorporated
5775 Morehouse Drive
San Diego, CA 92121-1714
U.S.A.

Qualcomm Confidential and Proprietary

Title
<Title>

Size	Sheet	Rev
E	Name	<A>

Date: 2017/10/30 | Sheet 21 of 38

Note: If best EMI practices are followed for MIPI CSI/DSI signals, there is no need for common mode choke filters. You may choose to have placeholders for common mode depending upon your design constraints.
Extreme care must be taken that no stubs are created by doing so.

EMI

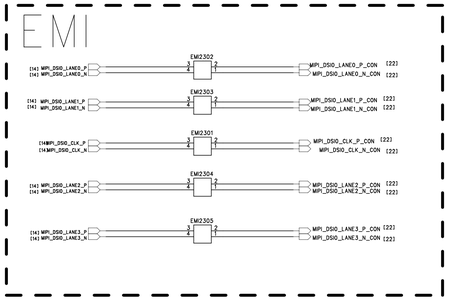

LCD

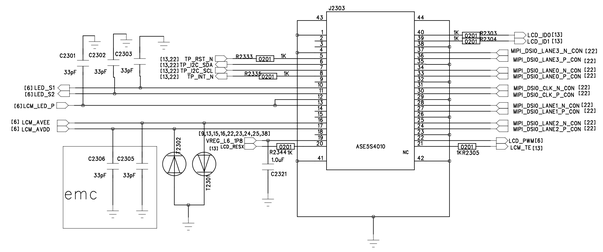

TP

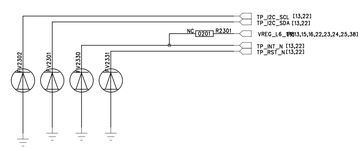

NOT TO BE USED, COPIED, REPRODUCED IN WHOLE OR IN PART, NOR ITS CONTENTS REVEALED IN ANY MANNER TO OTHERS WITHOUT THE EXPRESS WRITTEN PERMISSION OF QUALCOMM.
THIS TECHNICAL DATA MAY BE SUBJECT TO U.S. AND INTERNATIONAL EXPORT, RE-EXPORT OR TRANSFER ("EXPORT") LAWS. DIVERSION CONTRARY TO U.S. AND INTERNATIONAL LAW IS STRICTLY PROHIBITED
Copyright (C) 2014 QUALCOMM Incorporated
All rights reserved

QUALCOMM Incorporated
5775 Morehouse Drive
San Diego, CA 92121-1714
U.S.A.
Qualcomm Confidential and Proprietary

Title
<Title>

Size	Sheet Name	Rev
E		<A>

Date: 2017/10/30 | Sheet 22 of 38

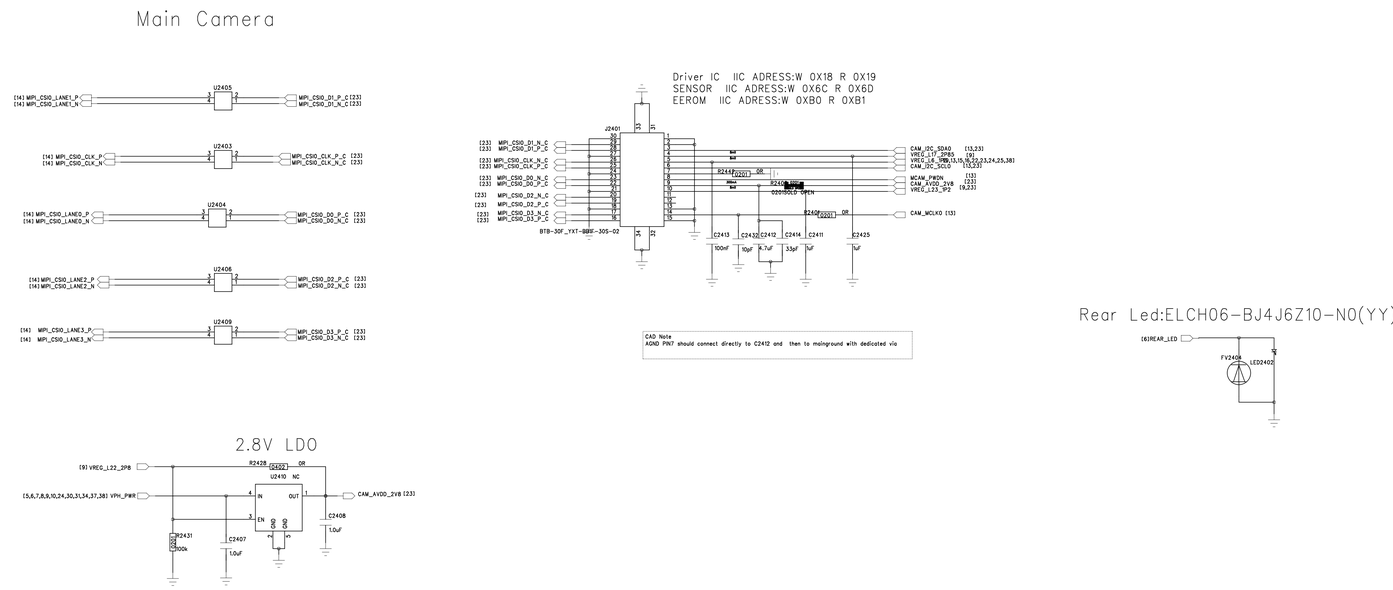

NOT TO BE USED, COPIED, REPRODUCED IN WHOLE OR IN PART, NOR ITS CONTENTS REVEALED IN ANY MANNER TO OTHERS WITHOUT THE EXPRESS WRITTEN PERMISSION OF QUALCOMM.
THIS TECHNICAL DATA MAY BE SUBJECT TO U.S. AND INTERNATIONAL EXPORT, RE-EXPORT OR TRANSFER ("EXPORT") LAWS. DIVERSION CONTRARY TO U.S. AND INTERNATIONAL LAW IS STRICTLY PROHIBITED
Copyright (C) 2014 QUALCOMM Incorporated
All rights reserved

QUALCOMM Incorporated
5775 Morehouse Drive
San Diego, CA 92121-1714
U.S.A.

Qualcomm Confidential and Proprietary

Title
<Title>

Size	Sheet	Rev
E	Name	<A>

Date: 2017/10/10 Sheet 23 of 38

G+Gyro

BMI160 SDO=0 0x68
SDO=1 0x69

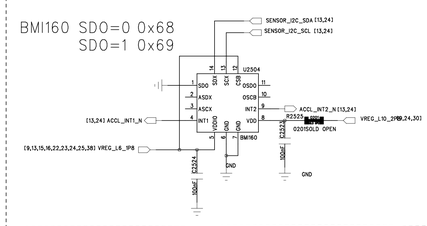

MN66233L 0x92 0x93

PL_SENSOR

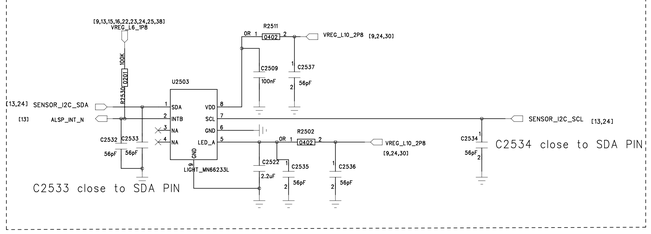

Accelerometer Sensor BMA253 SDO=0 0x18
SDO=1 0x19

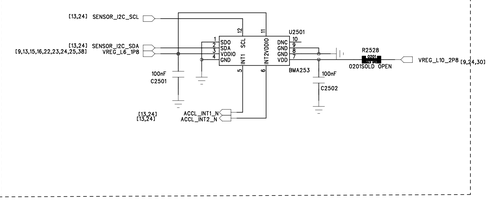

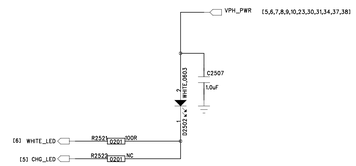

NOT TO BE USED, COPIED, REPRODUCED IN WHOLE OR IN PART, NOR ITS CONTENTS REVEALED IN ANY MANNER TO OTHERS WITHOUT THE EXPRESS WRITTEN PERMISSION OF QUALCOMM.
THIS TECHNICAL DATA MAY BE SUBJECT TO U.S. AND INTERNATIONAL EXPORT, RE-EXPORT OR TRANSFER ("EXPORT") LAWS. DIVERSION CONTRARY TO U.S. AND INTERNATIONAL LAW IS STRICTLY PROHIBITED.
Copyright (C) 2014 QUALCOMM Incorporated
All rights reserved

QUALCOMM Incorporated
5775 Morehouse Drive
San Diego, CA 92121-1714
U.S.A.
Qualcomm Confidential and Proprietary

Title
<Title>

Size	Sheet	Rev
E	Name	<A>

Date: 2017/10/30 Sheet 24 of 38

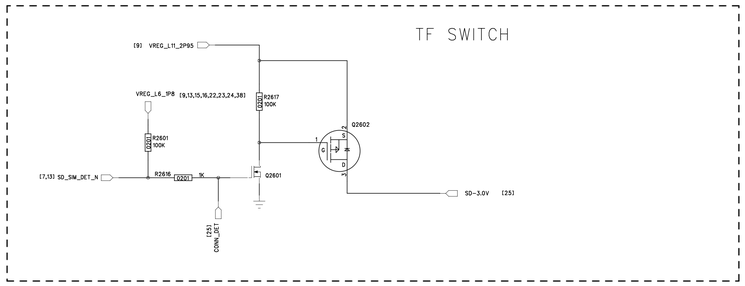

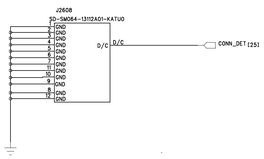

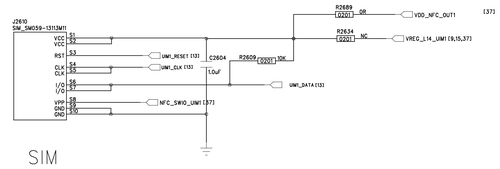

SIM

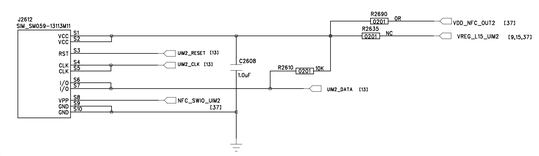

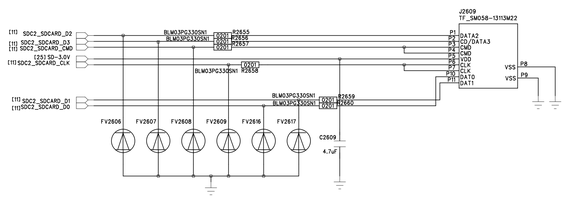

NOT TO BE USED, COPIED, REPRODUCED IN WHOLE OR IN PART, NOR ITS CONTENTS REVEALED IN ANY MANNER TO OTHERS WITHOUT THE EXPRESS WRITTEN PERMISSION OF QUALCOMM.
THIS TECHNICAL DATA MAY BE SUBJECT TO U.S. AND INTERNATIONAL EXPORT, RE-EXPORT OR TRANSFER ("EXPORT") LAWS. DIVERSION CONTRARY TO U.S. AND INTERNATIONAL LAW IS STRICTLY PROHIBITED
Copyright (C) 2014 QUALCOMM Incorporated
All rights reserved

QUALCOMM Incorporated
5775 Morehouse Drive
San Diego, CA 92121-1714
U.S.A.

Qualcomm Confidential
and Proprietary

Title
<Title>

Size	Sheet	Rev
E	Name	<A>

Date: 2017/10/10 Sheet 25 of 38

Keys

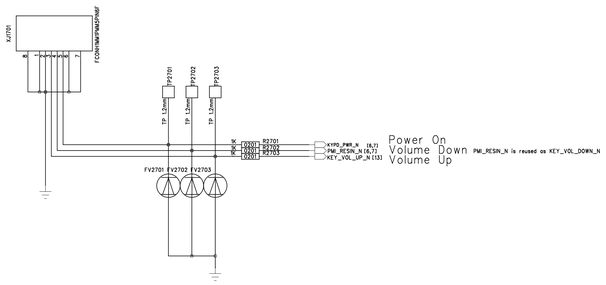

NOT TO BE USED, COPIED, REPRODUCED IN WHOLE OR IN PART, NOR
ITS CONTENTS REVEALED IN ANY MANNER TO OTHERS WITHOUT THE
EXPRESS WRITTEN PERMISSION OF QUALCOMM.
THIS TECHNICAL DATA MAY BE SUBJECT TO U.S. AND INTERNATIONAL
EXPORT, RE-EXPORT OR TRANSFER ("EXPORT") LAWS. DIVERSION
CONTRARY TO U.S. AND INTERNATIONAL LAW IS STRICTLY PROHIBITED
Copyright (C) 2014 QUALCOMM Incorporated
All rights reserved

QUALCOMM Incorporated
5775 Morehouse Drive
San Diego, CA 92121-1714
U.S.A.

Qualcomm Confidential
and Proprietary

Title
<Title>

Size	Sheet	Rev
C	Name	<X>

Date: 2017/10/30 Sheet 26 of 38

NOT TO BE USED, COPIED, REPRODUCED IN WHOLE OR IN PART, NOR
ITS CONTENTS REVEALED IN ANY MANNER TO OTHERS WITHOUT THE
EXPRESS WRITTEN PERMISSION OF QUALCOMM.
THIS TECHNICAL DATA MAY BE SUBJECT TO U.S. AND INTERNATIONAL
EXPORT, RE-EXPORT OR TRANSFER ("EXPORT") LAWS. DIVERSION
CONTRARY TO U.S. AND INTERNATIONAL LAW IS STRICTLY PROHIBITED

Copyright (C) 2014 QUALCOMM Incorporated
All rights reserved

QUALCOMM Incorporated
5775 Morehouse Drive
San Diego, CA 92121-1714
U.S.A.

Qualcomm Confidential
and Proprietary

Title
<Title>

Size	Sheet	Rev
E	Name	<A>

Date: 2017/10/10 Sheet 27 of 38

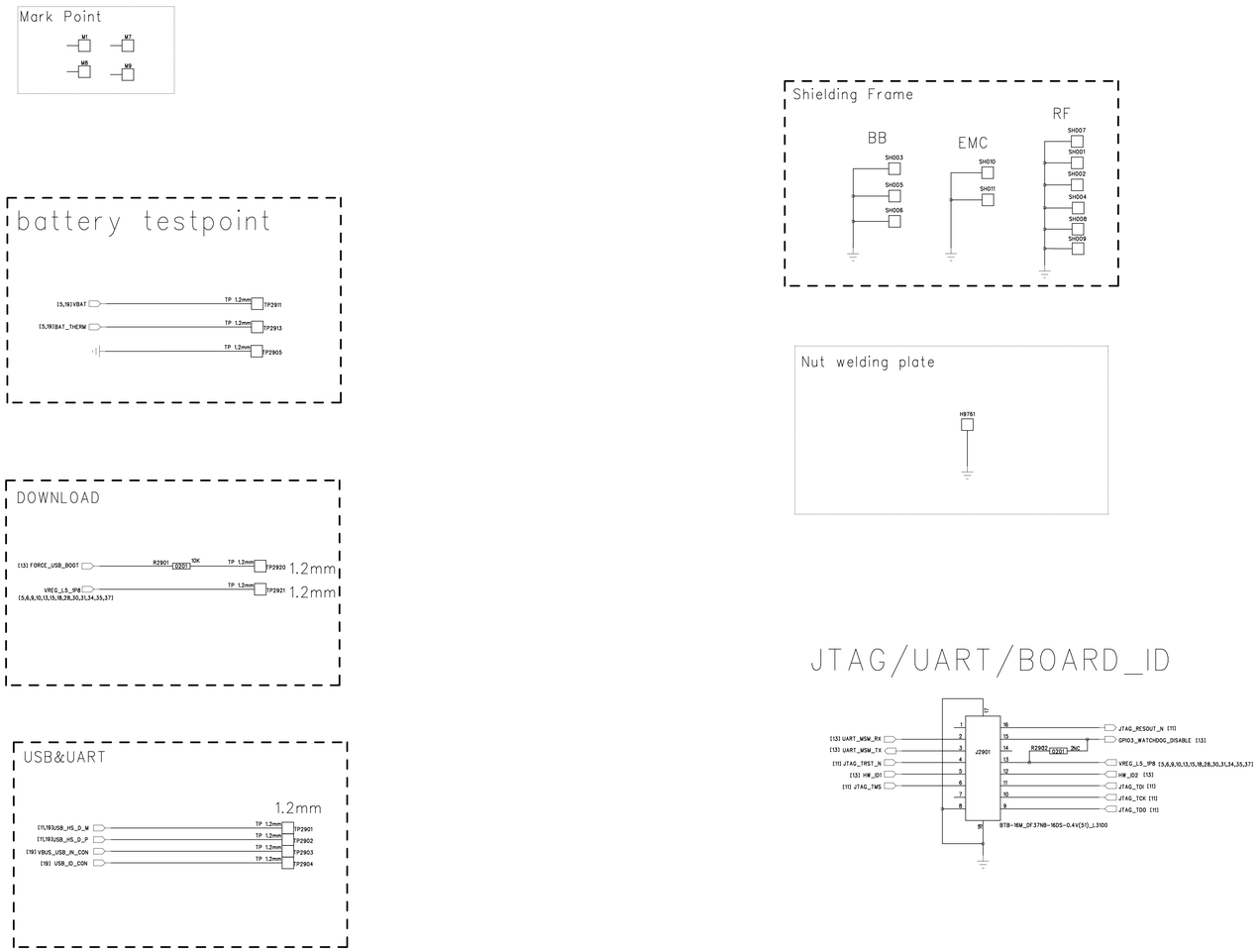

NOT TO BE USED, COPIED, REPRODUCED IN WHOLE OR IN PART, NOR ITS CONTENTS REVEALED IN ANY MANNER TO OTHERS WITHOUT THE EXPRESS WRITTEN PERMISSION OF QUALCOMM.
THIS TECHNICAL DATA MAY BE SUBJECT TO U.S. AND INTERNATIONAL EXPORT, RE-EXPORT OR TRANSFER ("EXPORT") LAWS. DIVERSION CONTRARY TO U.S. AND INTERNATIONAL LAW IS STRICTLY PROHIBITED
Copyright (C) 2014 QUALCOMM Incorporated
All rights reserved

QUALCOMM Incorporated
5775 Morehouse Drive
San Diego, CA 92121-1714
U.S.A.
Qualcomm Confidential and Proprietary

Title
<Title>

Size	Sheet	Rev
E	None	<A>

Date: 2017/10/10 | Sheet 28 of 38

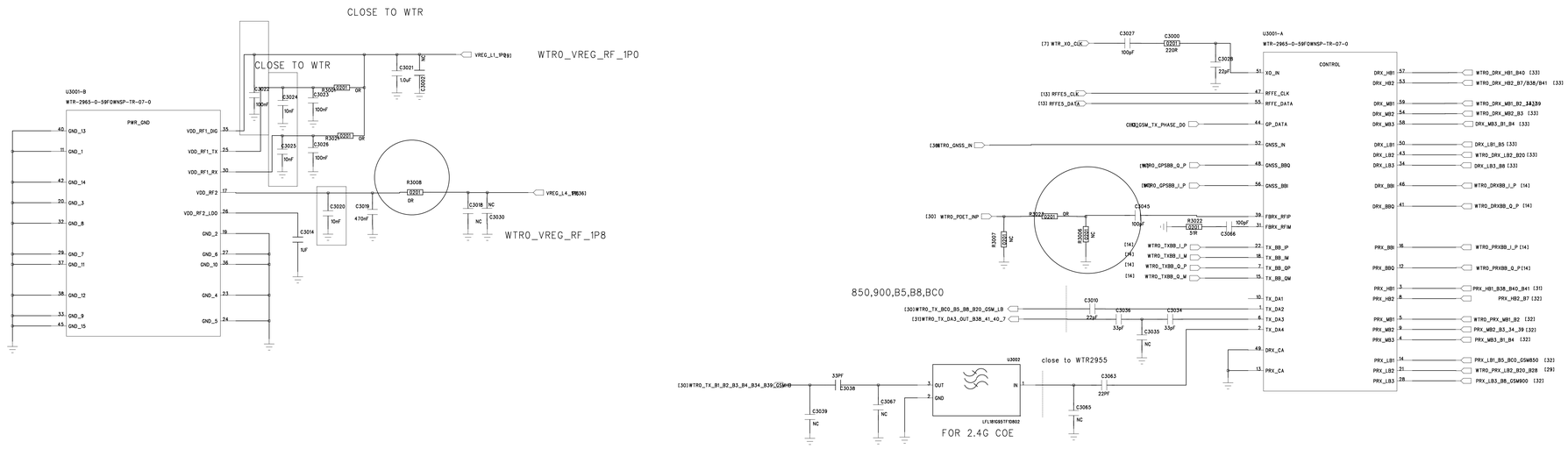

B20&B28A_B28B PRX SPDT SWITCH

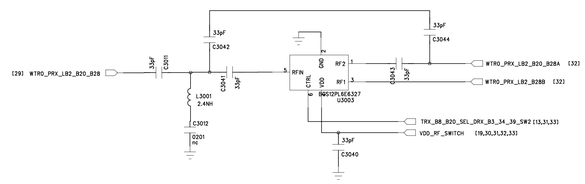

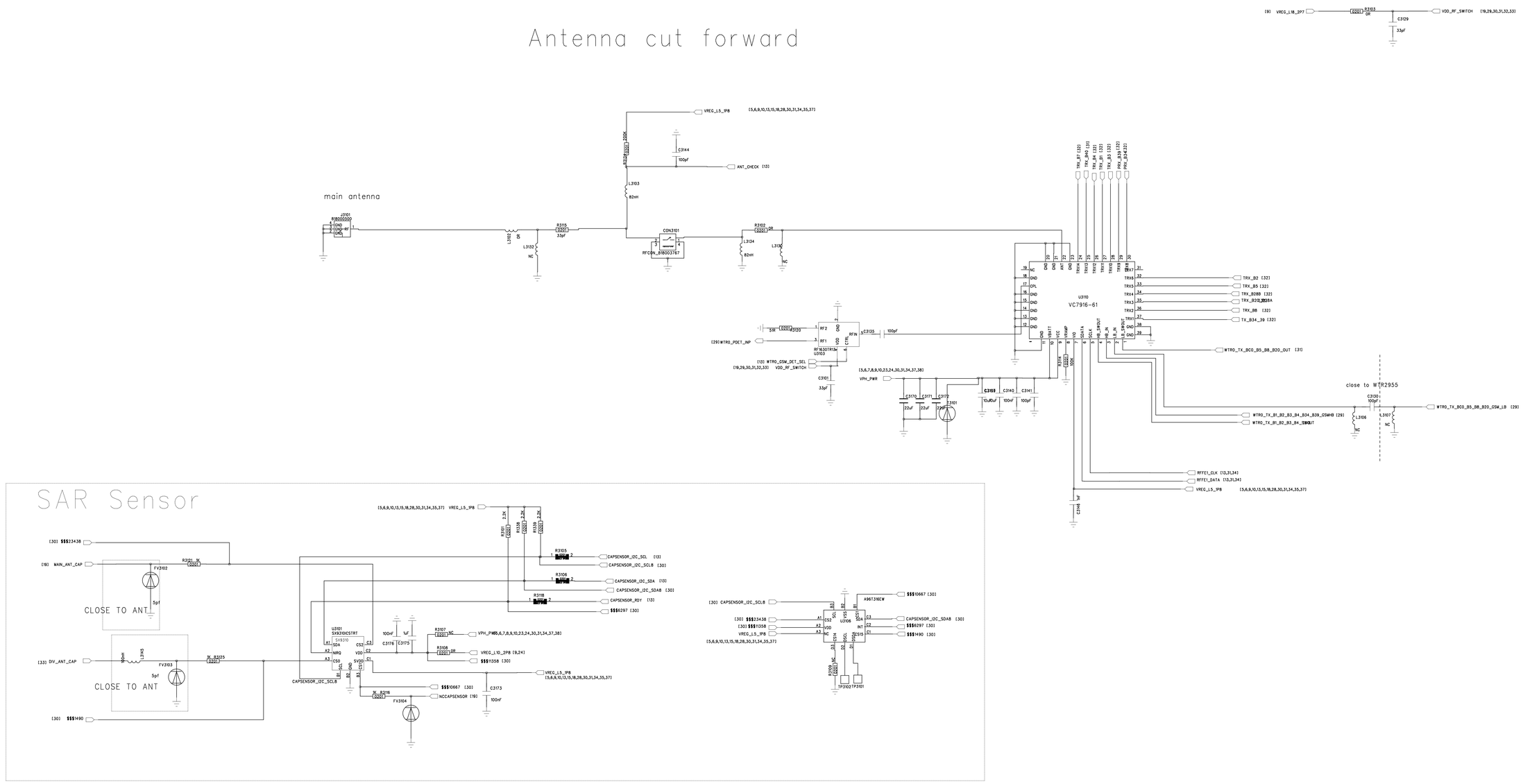
Antenna cut forward
main antenna
J3101
R18D03200
GND
GND-RF
GND
L3102 0R
L3132 NC
R3115 0201 33pF
R3114 0201 300K
L3103 82nH
C3144 100pF
VREG_L5_1P8 [5,6,9,10,13,15,18,28,30,31,34,35,37]
ANT_CHECK [13]
CON3101
RFCON_R18D03767
R3102 0201 0R
L3134 82nH
L3133 NC
U3110
VC7916-61
TRX_B7 [32]
TRX_B40 [32]
TRX_B4 [32]
TRX_B1 [32]
TRX_B3 [32]
TRX_B34 [32]
TRX_B2 [32]
TRX_B5 [32]
TRX_B28B [32]
TRX_B20_B28A
TRX_B8 [32]
TRX_B34_39 [32]
WTR0_TX_BC0_B5_B8_B20_OUT [31]
WTR0_TX_B1_B2_B3_B4_B34_B39_GSMHB [29]
WTR0_TX_B1_B2_B3_B4_B34_B39_GSMOUT
RFFE1_CLK [13,31,34]
RFFE1_DATA [13,31,34]
VREG_L5_1P8 [5,6,9,10,13,15,18,28,30,31,34,35,37]
C3145
close to WTR2955
C3150 100pF
L3106 NC
L3107 NC
WTR0_TX_BC0_B5_B8_B20_GSM_LB [29]
[9] VREG_L18_2P7
R3103 0R
VDD_RF_SWITCH [19,29,30,31,32,33]
C3129 33pF
RF2
RF1
GND
VDD
CTRL
RFIN
RF1630TR13
U3103
R3120 0201 5R
[29] WTR0_PDET_INP
[13] WTR0_GSM_DET_SEL
[19,29,30,31,32,33] VDD_RF_SWITCH
C3101 33pF
C3135 100pF
[5,6,7,8,9,10,23,24,30,31,34,37,38]
VPH_PWR
C3170 22uF
C3171 22uF
FV3101 22pF
C3139 10uF
C3140 100nF
C3141 100pF
R3116 0201 300K
C3142

SAR Sensor
[30] $$$23438
[19] MAIN_ANT_CAP
R3201 NC 0201
FV3102
5pf
CLOSE TO ANT
[33] DIV_ANT_CAP
L3145 100nH
FV3103
5pf
CLOSE TO ANT
R3203 1K 0201
[30] $$$1490
[5,6,9,10,13,15,18,28,30,31,34,35,37] VREG_L5_1P8
R3301 2.2K 0201
R3138 2.2K 0201
R3139 2.2K 0201
R3305 0201 0R
R3306 0201 0R
R3318 0201 0R
CAPSENSOR_I2C_SCL [13]
CAPSENSOR_I2C_SCL8 [30]
CAPSENSOR_I2C_SDA [13]
CAPSENSOR_I2C_SDA8 [30]
CAPSENSOR_RDY [13]
$$$6297 [30]
U3101
SX9310ICSTRT
SDA
NIRQ
SVDD
VDD
GND
CAPSENSOR_I2C_SCL8
100nF
1uF
C3176
C3175
R3107 0201 NC
VPH_PWR5,6,7,8,9,10,23,24,30,31,34,37,38
R3108 0201 0R
VREG_L10_2P8 [9,24]
$$$11358 [30]
VREG_L5_1P8 [5,6,9,10,13,15,18,28,30,31,34,35,37]
$$$10667 [30]
NCCAPSENSOR [19]
C3173 100nF
R3116 1K 0201
FV3104
[30] CAPSENSOR_I2C_SCL8
[30] $$$23438
[30] $$$11358
VREG_L5_1P8
[5,6,9,10,13,15,18,28,30,31,34,35,37]
U3106
A96T36EW
SDA
INT
SCL
$$$10667 [30]
CAPSENSOR_I2C_SDA8 [30]
$$$6297 [30]
$$$1490 [30]
R3100 NC 0201
TP3102
TP3101

REVISION RECORD			
LTR	ECO NO:	APPROVED:	DA

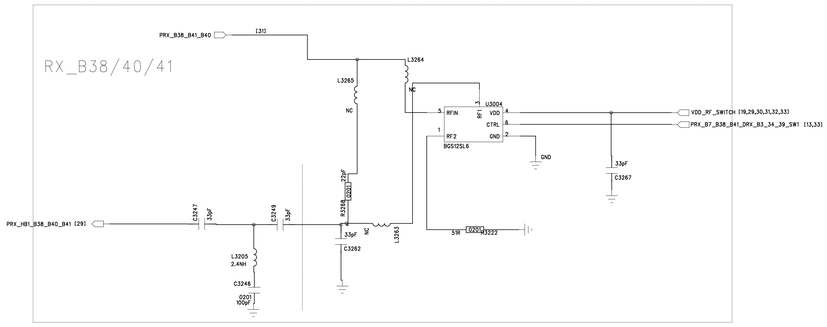

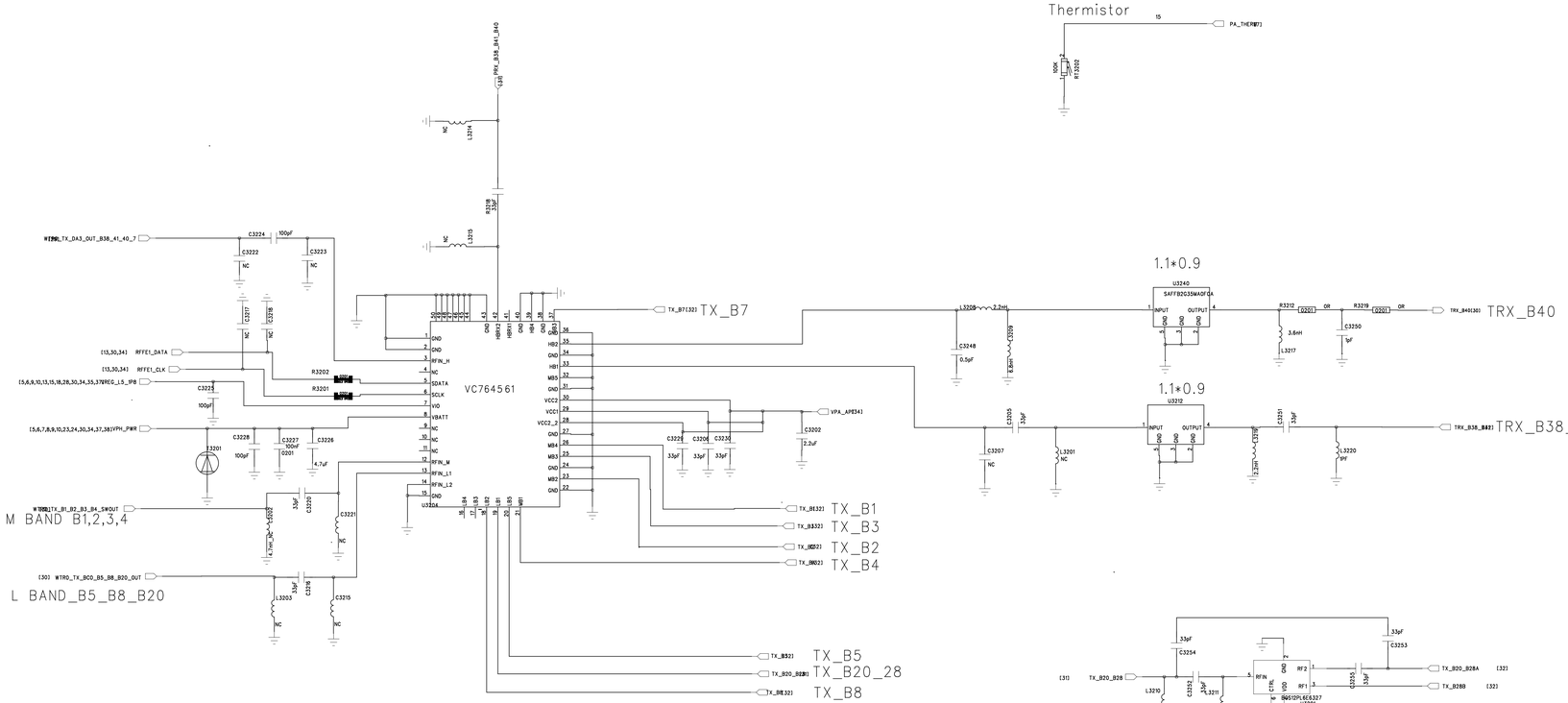

DRAWN: <Drawn By>	DATED: <Drawn Date>	COMPANY: <Company Name>	
CHECKED: <Checked By>	DATED: <Checked Date>	TITLE: <Title>	
QUALITY CONTROL: <QC By>	DATED: <QC Date>	CODE: <Code>	SIZE: E
RELEASED: <Released By>	DATED: <Release Date>	DRAWING NO: <Drawing Number>	REV: <Revi
		SCALE: <Scale>	SHEET: 31 OF 38

B1 TRX

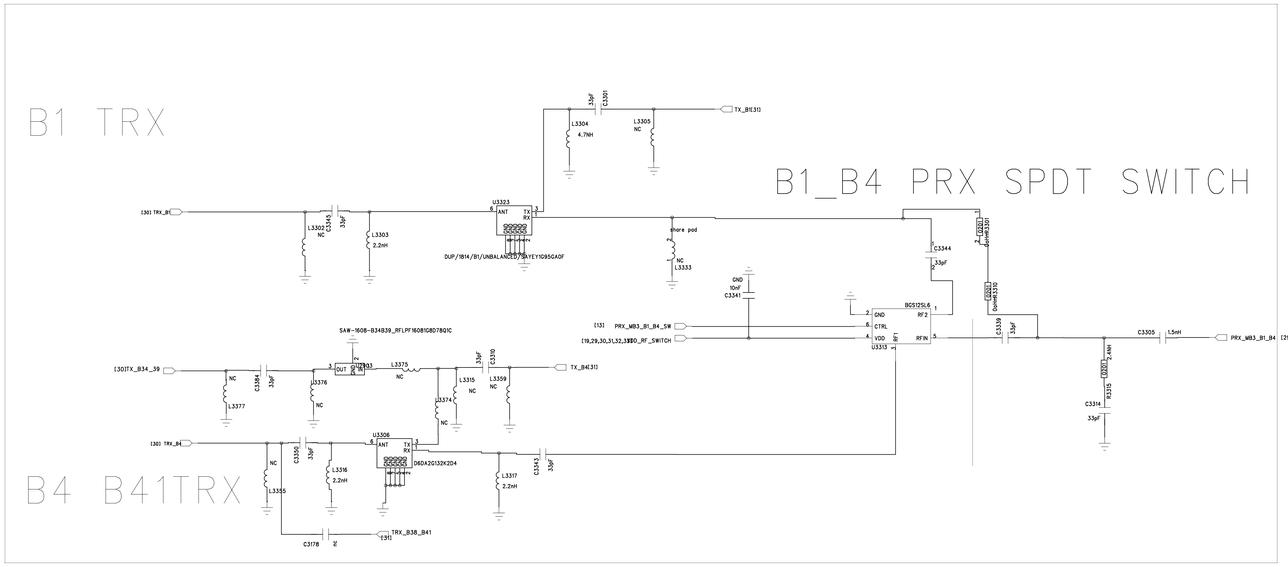

B7 TRX

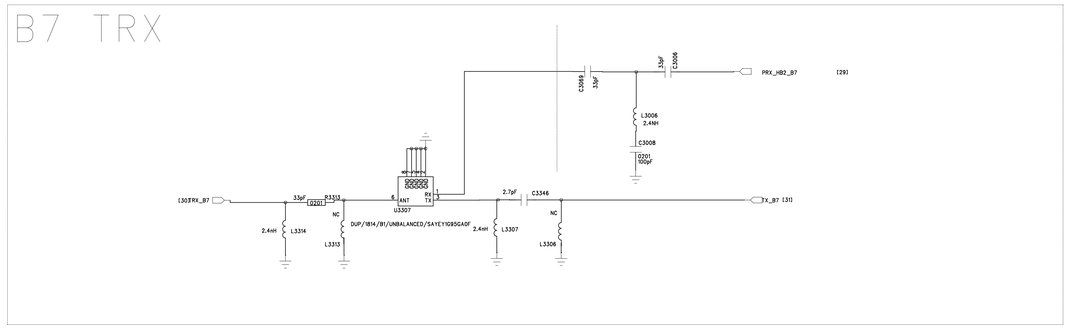

B8 TRX

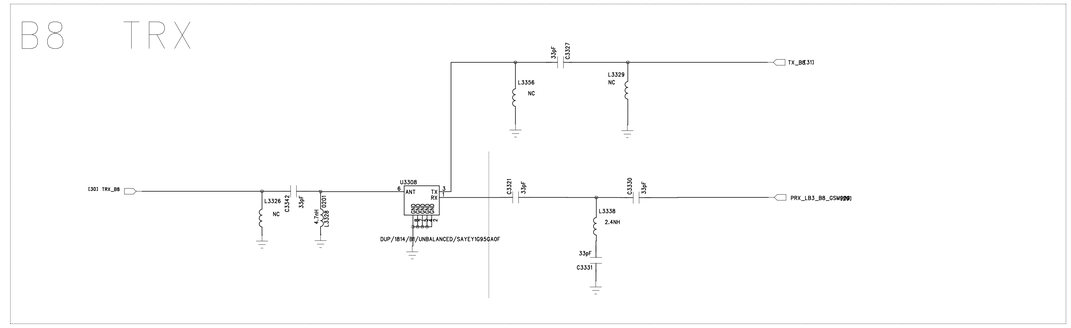

B2 TRX

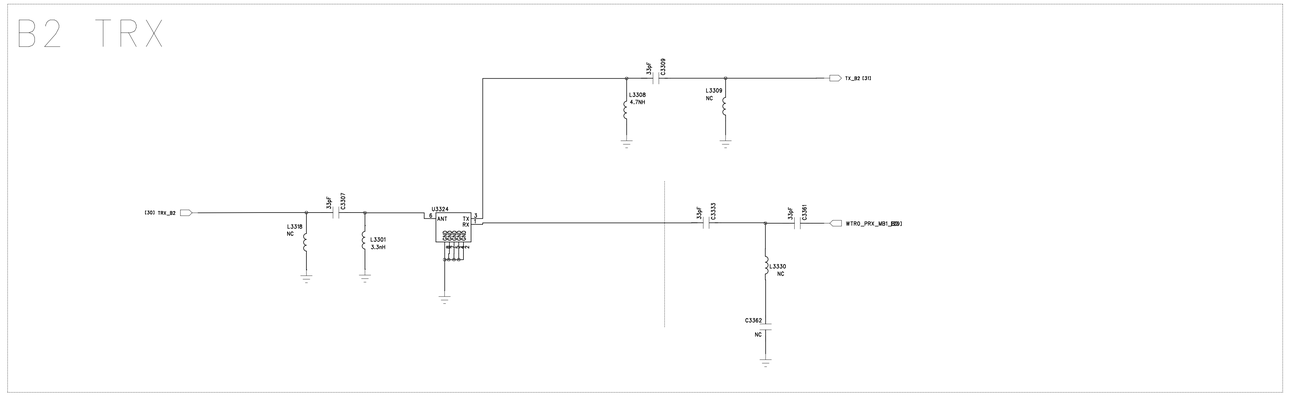

B20_B28A TRX

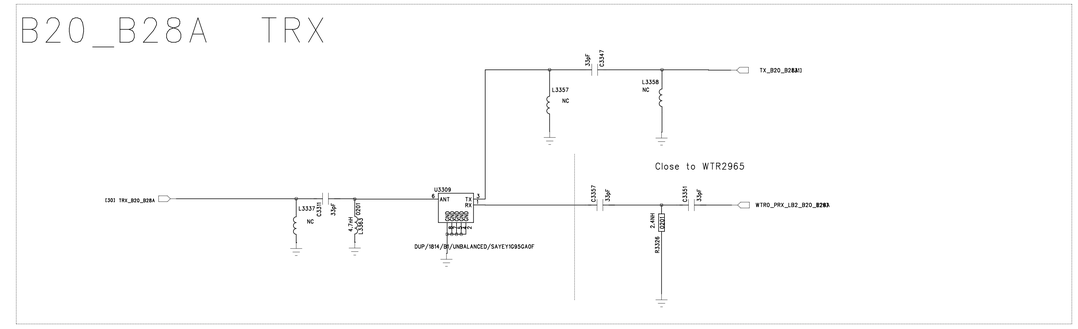

B3 TRX

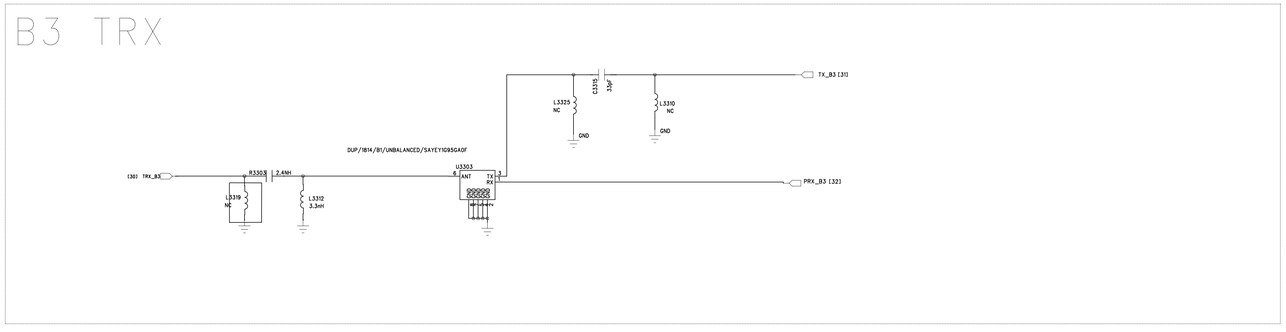

B28B TRX

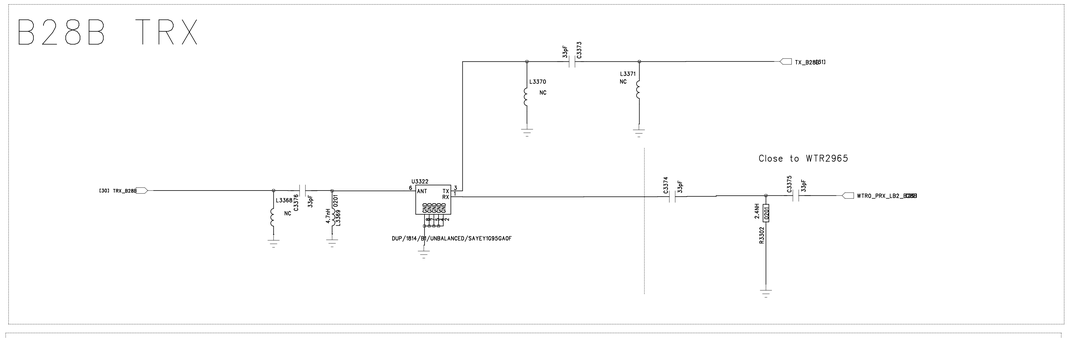

B5 TRX

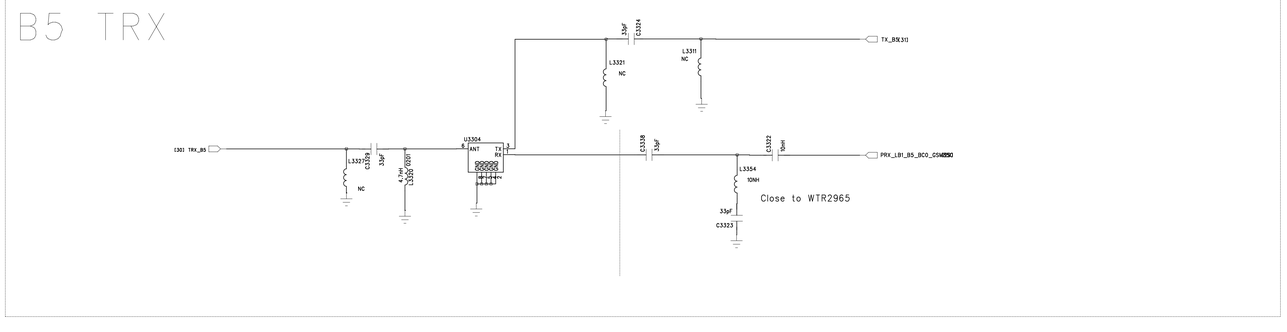

B3_B34_B39 PRX

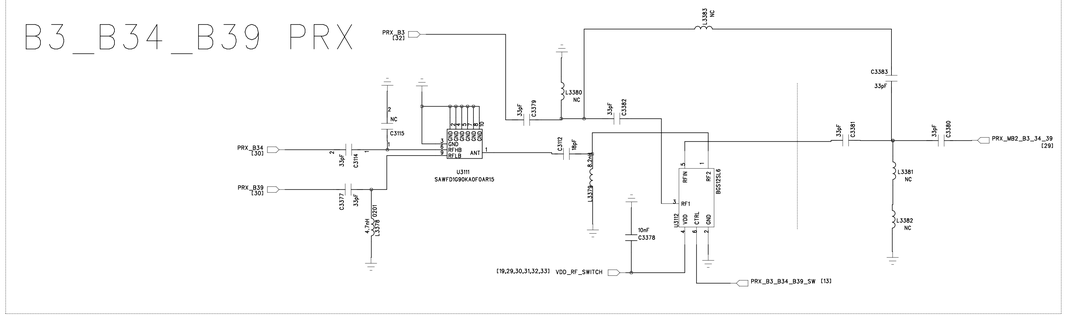

DIV Antenna

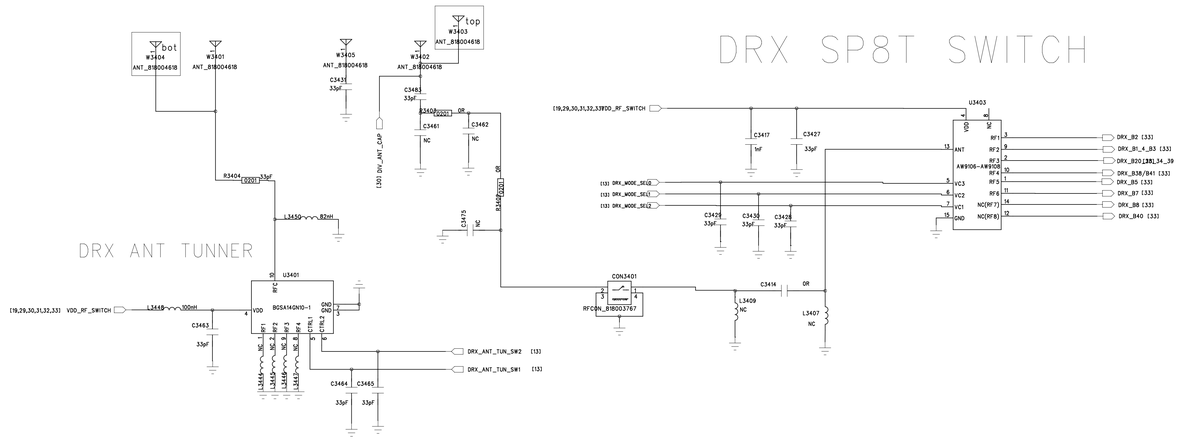

B8_DRX

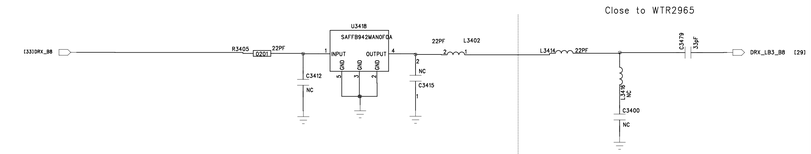

B20_B28_DRX

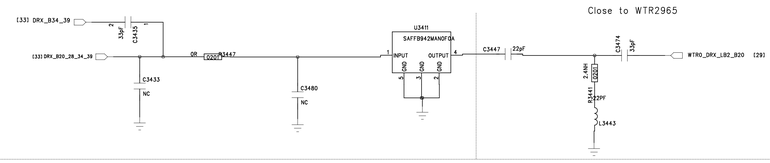

B38/B41_DRX

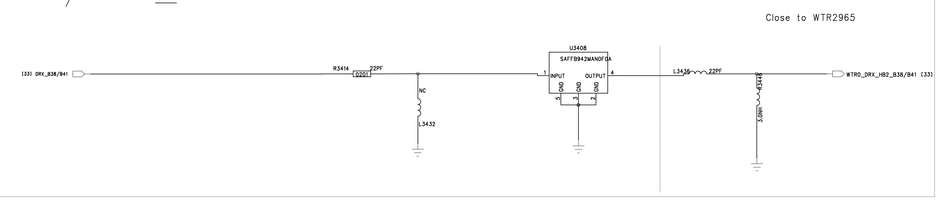

B1/B4_B3 DRX

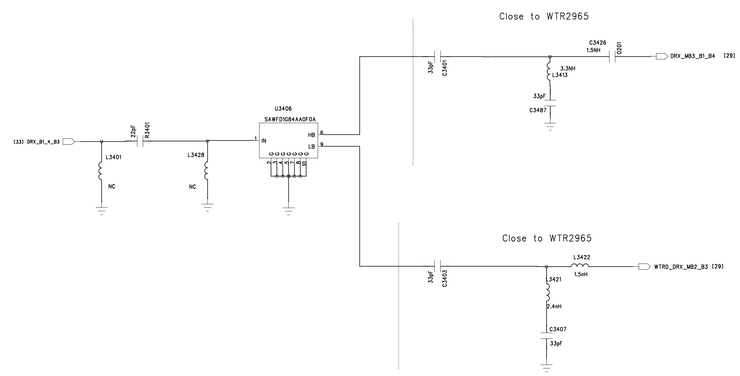

B40_DRX

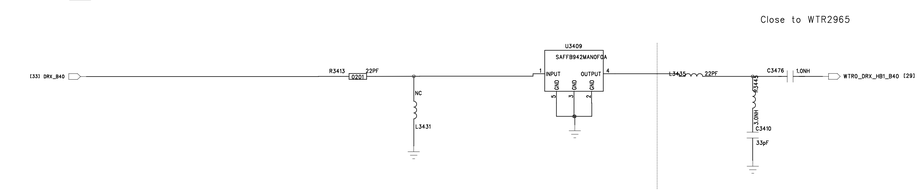

B2_DRX

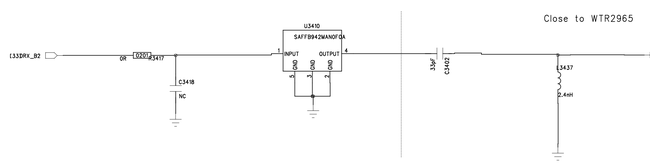

B5_DRX

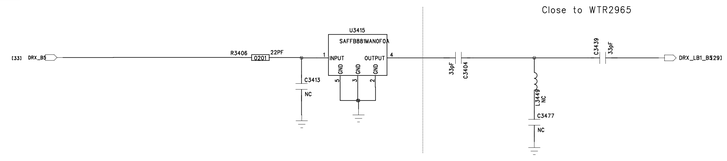

B7_DRX

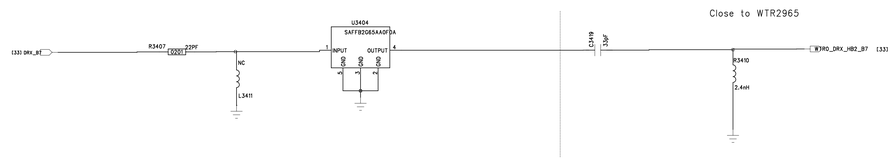

B7/B38/B41_DRX_SWITCH

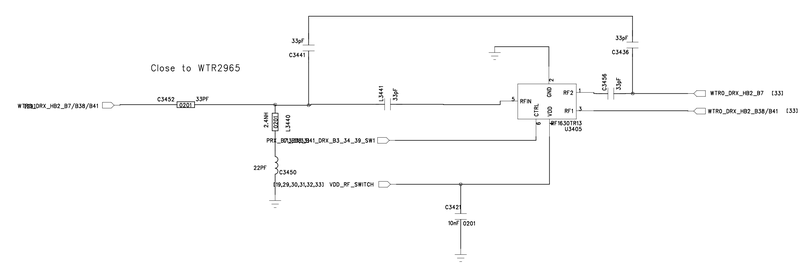

B2_34_39 SWITCH

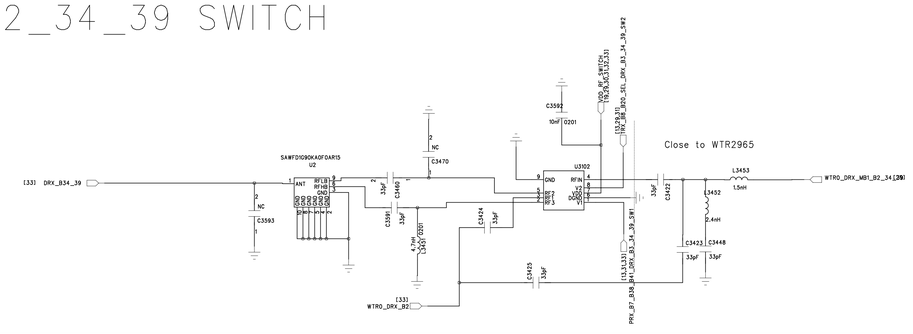

APT

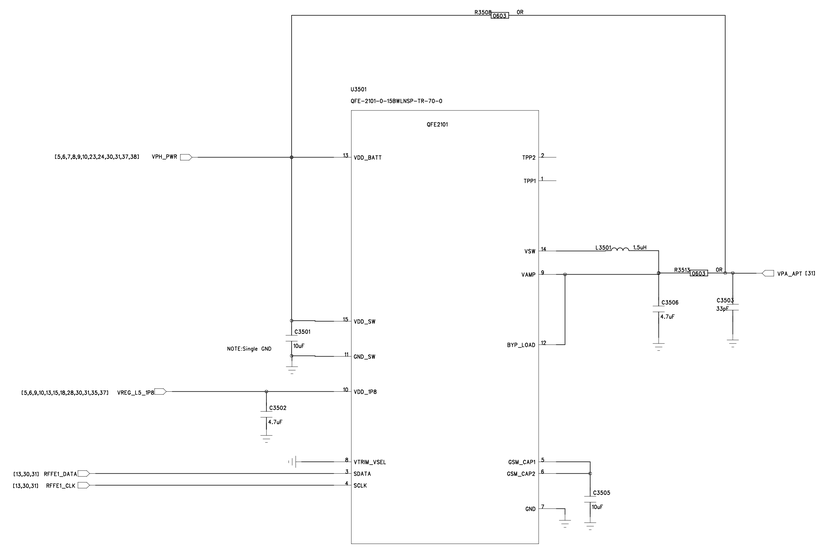
R3508
0603
DR
U3501
QFE-2101-0-15BWLNSP-TR-70-0
QFE2101
[5,6,7,8,9,10,23,24,30,31,37,38]
VPH_PWR
13
VDD_BATT
TPP2
2
TPP1
1
VSW
14
L3501
1.5uH
VAMP
9
R3515
0603
DR
VPA_APT [31]
C3506
4.7uF
C3503
33pF
15
VDD_SW
C3501
10uF
NOTE:Single GND
11
GND_SW
BYP_LOAD
12
[5,6,9,10,13,15,18,28,30,31,35,37]
VREG_L5_IPB
10
VDD_IPB
C3502
4.7uF
8
VTRIM_VSEL
[13,30,31]
RFFE1_DATA
3
SDATA
[13,30,31]
RFFE1_CLK
4
SCLK
GSM_CAP1
5
GSM_CAP2
6
C3505
10uF
GND
7

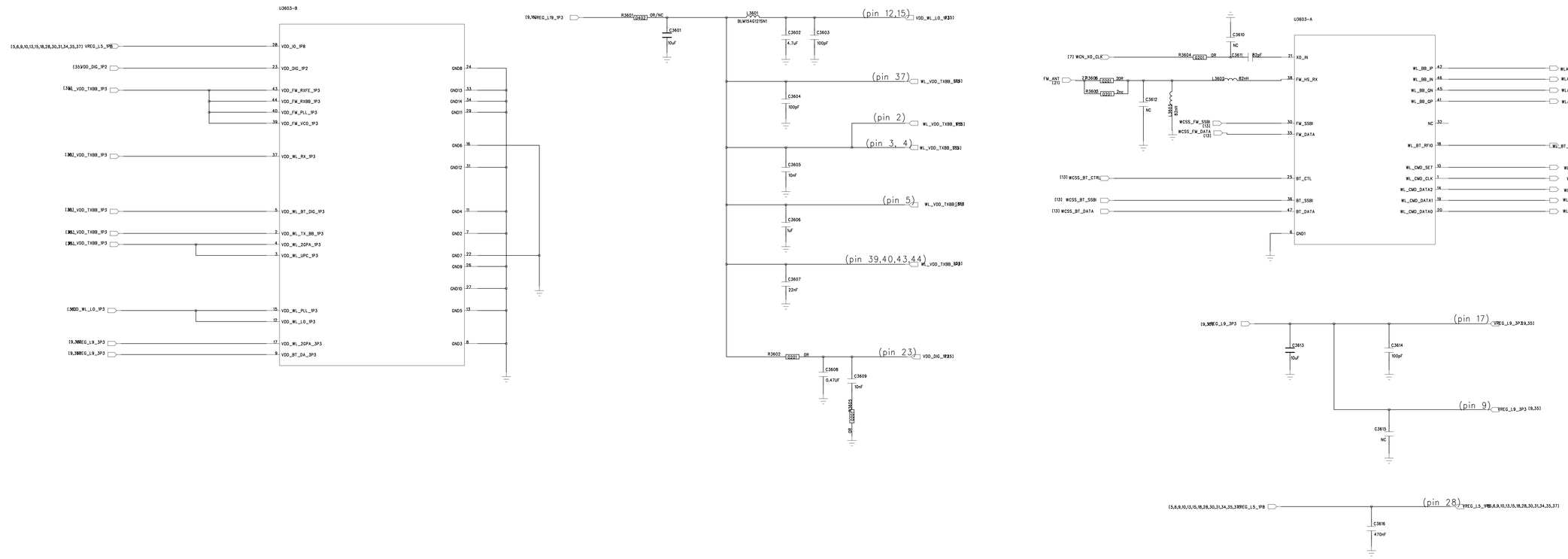
U3603-B
U3603-A
VDD_IO_IP8
VDD_DIG_IP2
VDD_FM_RXFE_IP3
VDD_FM_RXBB_IP3
VDD_FM_PLL_IP3
VDD_FM_VCO_IP3
VDD_WL_RX_IP3
VDD_WL_BT_DIG_IP3
VDD_WL_TX_BB_IP3
VDD_WL_2GPA_IP3
VDD_WL_LPC_IP3
VDD_WL_PLL_IP3
VDD_WL_LO_IP3
VDD_WL_2GPA_IP3
VDD_BT_DA_IP3
GND8
GND13
GND14
GND11
GND6
GND12
GND4
GND2
GND7
GND9
GND10
GND5
GND3
(pin 12,15)
(pin 37)
(pin 2)
(pin 3, 4)
(pin 5)
(pin 39,40,43,44)
(pin 23)
(pin 17)
(pin 9)
(pin 28)
XO_IN
FM_HS_RX
FM_SSBI
FM_DATA
BT_CTL
BT_SSBI
BT_DATA
GND1
WL_BB_IP
WL_BB_IN
WL_BB_QN
WL_BB_QP
NC
WL_BT_RFIO
WL_CMD_SET
WL_CMD_CLK
WL_CMD_DATA2
WL_CMD_DATA1
WL_CMD_DATA0
WLAN_BB_IP [14]
WLAN_BB_IN [14]
WLAN_BB_QN [14]
WLAN_BB_QP [14]
WL_BT_RFIO_ZP4G [36]
WL_CMD_SET [13]
WL_CMD_CLK [13]
WL_CMD_DATA_2 [13]
WL_CMD_DATA_1 [13]
WL_CMD_DATA_0 [13]
WCN_XO_CLK [7]
FW_ANT [21]
WCSS_FM_SSBI [13]
WCSS_FM_DATA [13]
WCSS_BT_CTRL [13]
WCSS_BT_SSBI [13]
WCSS_BT_DATA [13]
VREG_L9_3P3 [9,35]
VREG_L5_IP8 [5,6,9,10,13,15,18,28,30,31,34,35,37]
L3601
BLM15AG121SN1
L3602
B2nH
R3602
0R
R3603
0R
R3604
0R
R3606
20R
R3608
2oc
R3605
82kOhm
C3601
10uF
C3602
4.7uF
C3603
100pF
C3604
100pF
C3605
10nF
C3606
1uF
C3607
22nF
C3608
0.47UF
C3609
10nF
C3610
NC
C3611
82pF
C3612
NC
C3613
10uF
C3614
100pF
C3615
NC
C3616
470nF

REVISION	
LTR	ECO NO:

GPS WIFI 2.4G Ant

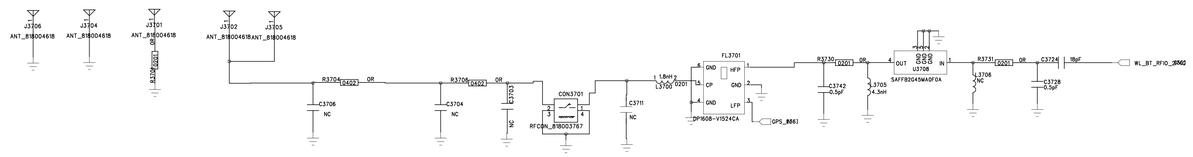

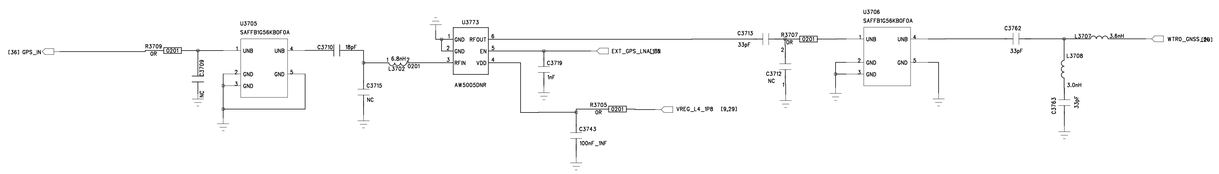

COMPANY: <Company Nam			
TITLE: <Title>			
DRAWN: <Drawn By>	DATED: <Drawn Date>		
CHECKED: <Checked By>	DATED: <Checked Date>	CODE: <Code>	SIZE: E
QUALITY CONTROL: <QC By>	DATED: <QC Date>		DRAWING <Drawing N
RELEASED: <Released By>	DATED: <Release Date>	SCALE: <Scale>	

REVISION RECORD		
LTR	ECO NO:	APPROVED:

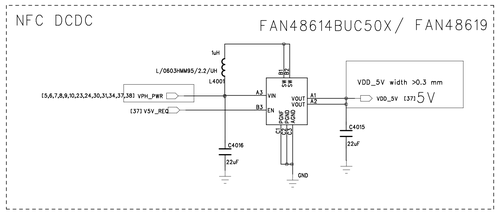

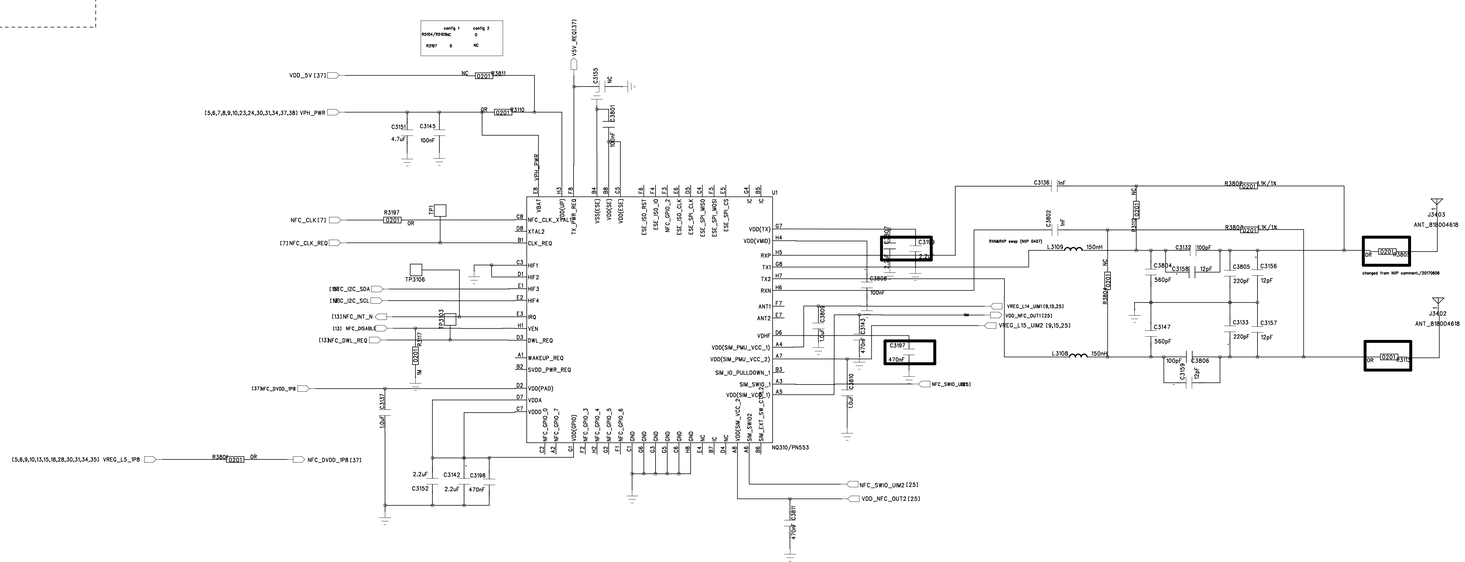

DRAWN: <Drawn By>	DATED: <Drawn Date>	COMPANY: <Company Name>	
CHECKED: <Checked By>	DATED: <Checked Date>	TITLE: <Title>	
QUALITY CONTROL: <QC By>	DATED: <QC Date>	CODE: <Code>	SIZE: E
RELEASED: <Released By>	DATED: <Release Date>	DRAWING NO: <Drawing Number>	REV: <Rev>
		SCALE: <Scale>	SHEET: 37 OF 38

REVISION	
LTR	ECO NO:

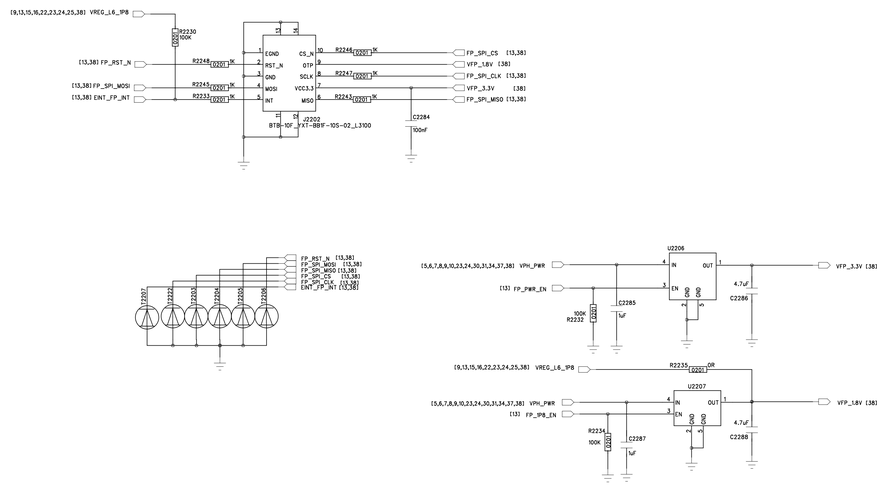

COMPANY: <Company Nam			
TITLE: <Title>			
DRAWN: <Drawn By>	DATED: <Drawn Date>	CODE: <Code>	SIZE: E
CHECKED: <Checked By>	DATED: <Checked Date>		DRAWING <Drawing N
QUALITY CONTROL: <QC By>	DATED: <QC Date>		
RELEASED: <Released By>	DATED: <Release Date>	SCALE: <Scale>	