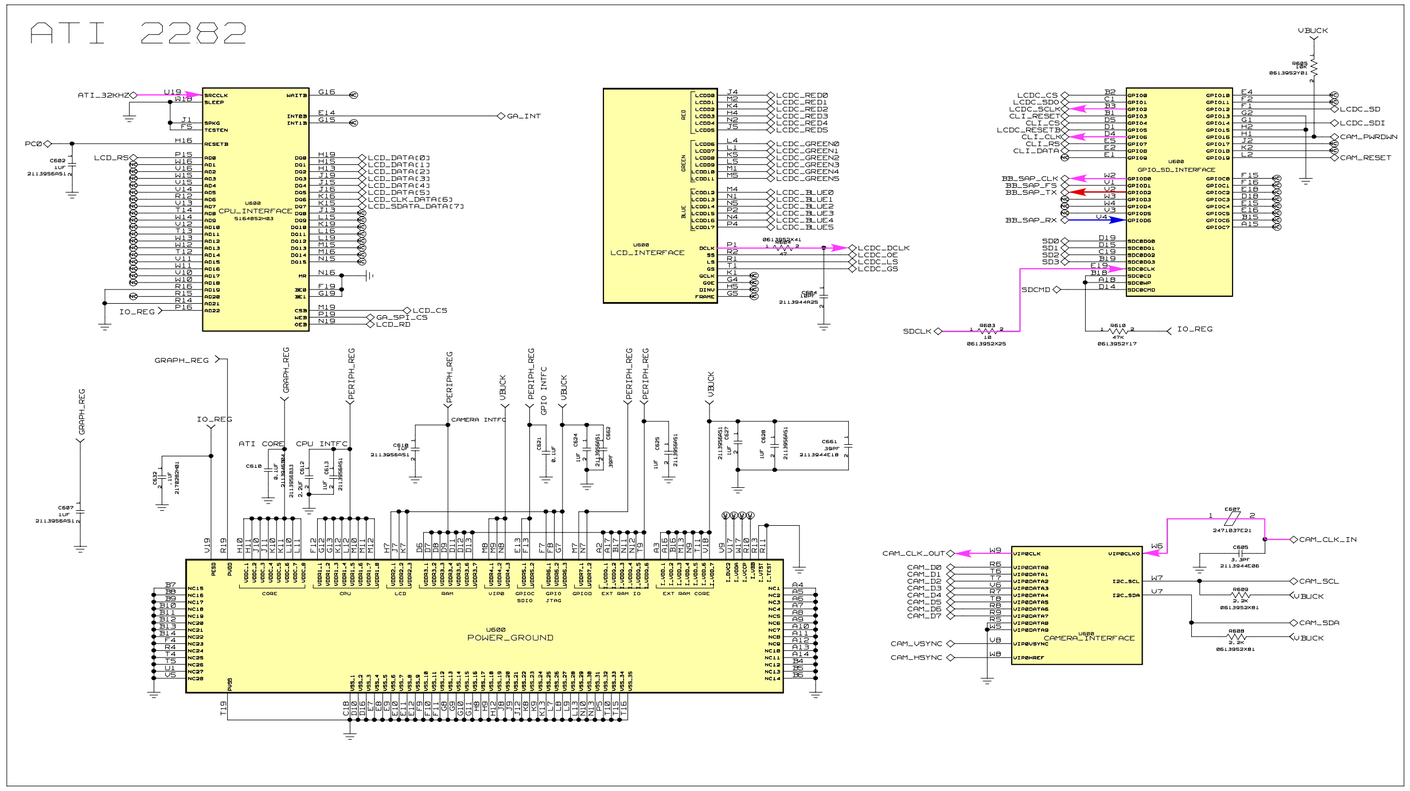

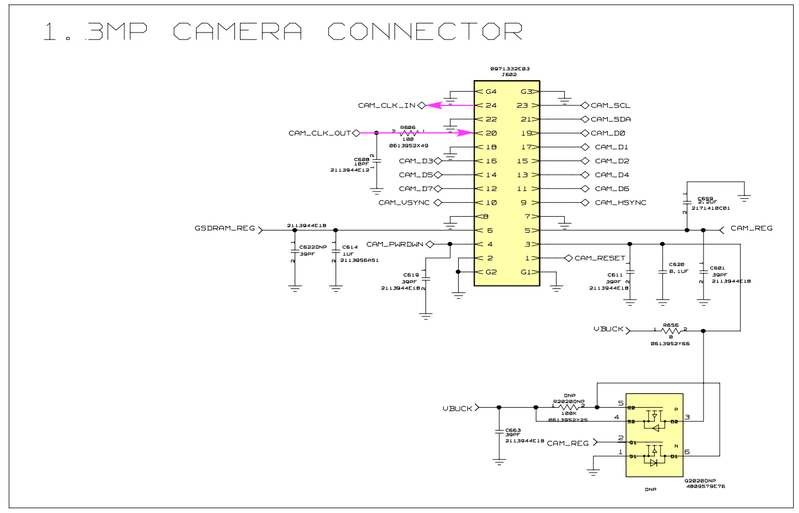

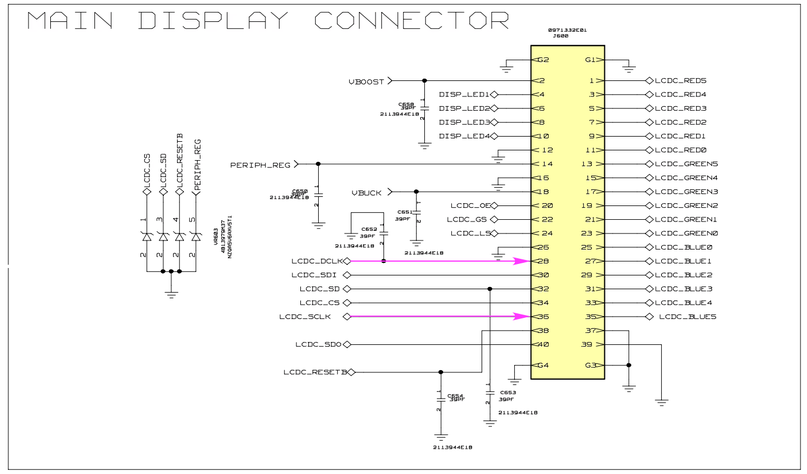

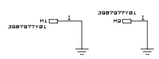

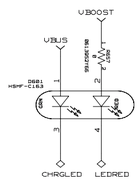

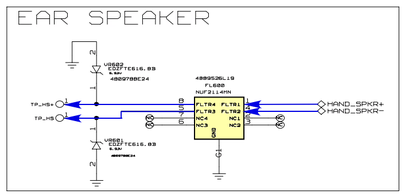

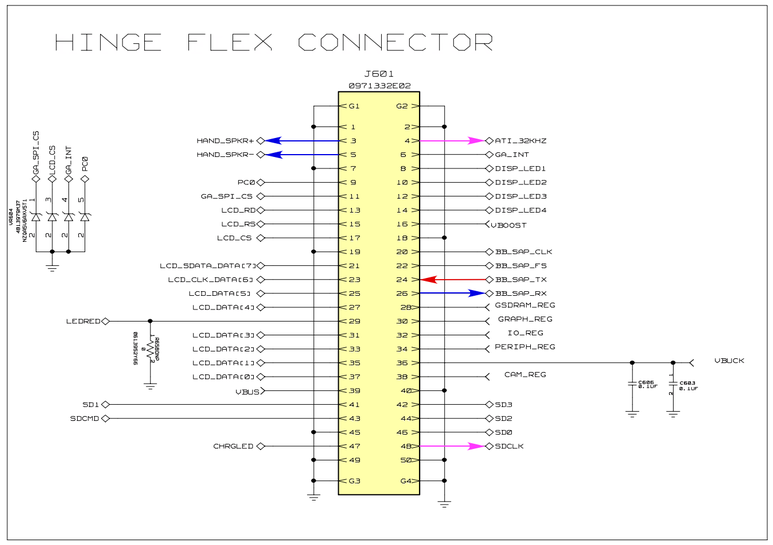

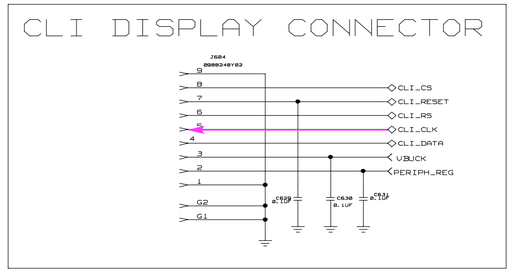

W510_ 8471434A01

Service Engineering & Optimization

Level 3 Authorized

Service Engineering & Optimization	2007.01.26
Level 3 Schematics	Rev. O
W510	8471434A01
	Page 1 of 1